NEC

MDview Series

MDview 232
MDview 241
MDview 271

User's Guide

Edition 8.0 - May 2013

Index

Warning, Caution....English-1
Declaration of Conformity....English-1
Intended Use in Medical Environment....English-2
MDview 232/241/271 Product Features....English-2
Contents....English-3
Quick Start....English-4
Controls....English-9
Using the PICTURE MODE function....English-15
Advanced OSD....English-16
General recommendations....English-24
Specifications - MDview 232....English-26
Specifications - MDview 241....English-27
Specifications - MDview 271....English-28
Features....English-29
Troubleshooting....English-30
Using the Auto Brightness function....English-32
TCO'03....English-33
TCO Displays 5....English-34
Manufacturer's Recycling and Energy Information....English-35

For MDview 232:

ENERGY STAR

WARNING

TO PREVENT FIRE OR SHOCK HAZARDS, DO NOT EXPOSE THIS UNIT TO RAIN OR MOISTURE. ALSO, DO NOT USE THIS UNIT'S POLARIZED PLUG WITH AN EXTENSION CORD RECEPTACLE OR OTHER OUTLETS UNLESS THE PRONGS CAN BE FULLY INSERTED.

REFRAIN FROM OPENING THE CABINET AS THERE ARE HIGH VOLTAGE COMPONENTS INSIDE. REFER SERVICING TO QUALIFIED SERVICE PERSONNEL.

CAUTION

CAUTION: TO REDUCE THE RISK OF ELECTRIC SHOCK, MAKE SURE POWER CORD IS UNPLUGGED FROM WALL SOCKET. TO FULLY DISENGAGE THE POWER TO THE UNIT, PLEASE DISCONNECT THE POWER CORD FROM THE AC OUTLET. DO NOT REMOVE COVER (OR BACK). NO USER SERVICEABLE PARTS INSIDE. REFER SERVICING TO QUALIFIED SERVICE PERSONNEL.

This symbol warns user that uninsulated voltage within the unit may have sufficient magnitude to cause electric shock. Therefore, it is dangerous to make any kind of contact with any part inside this unit.

This symbol alerts the user that important literature concerning the operation and maintenance of this unit has been included. Therefore, it should be read carefully in order to avoid any problems.

Caution:

When operating your MDview Series model with a 220-240V AC power source in Europe, use the power cord provided with the monitor.

In the UK, a BS approved power cord with a moulded plug has a Black (five Amps) fuse installed for use with this equipment. If a power cord is not supplied with this equipment please contact your supplier.

For all other cases, use a power cord that matches the AC voltage of the power outlet and has been approved by and complies with the safety standard of your particular country.

Declaration of Conformity

Declaration of the Manufacturer

We hereby certify that the colour monitors L239TW (23"), L240UN (24"), L279TV (27") are in compliance with:

Council Directive 2006/95/EC:
- EN 60950-1

Council Directive 2004/108/EC:
- EN 55022
- EN 61000-3-2
- EN 61000-3-3
- EN 55024

Council Directive 2009/125/EC:
EC No. 1275/2008
- EN 62301:2005

and marked with

NEC Display Solutions, Ltd.
4-13-23, Shibaura,
Minato-Ku
Tokyo 108-0023, Japan

Windows is a registered trademark of Microsoft Corporation.
NEC is a registered trademark of NEC Corporation.
DisplayPort is trademarks of Video Electronics Standards Association.
OmniColor is a registered trademark of NEC Display Solutions Europe GmbH in the countries of EU and Switzerland.
ErgoDesign is a registered trademark of NEC Display Solutions, Ltd. in Austria, Benelux, Denmark, France, Germany, Italy, Norway, Spain, Sweden, U.K.
Adobe® is a registered trademark or trademark of Adobe Systems Incorporated in the U.S. and/or other countries.
All other brands and product names are trademarks or registered trademarks of their respective owners.

Intended Use in Medical Environment

The MDview Series colour displays are intended to be used for secondary diagnostics and review of medical images by trained physicians.

Unpacking, Installation and calibration of this display should only be done by authorized and trained personnel. Any installation done by a non-authorized person is done under his own risk and we accept no responsibility in any device malfunctioning.

WARNING: - MDview Series Displays are not certified as Medical Devices according to EU Directive 92/43/EC.

- DO NOT use a MDview 232/241/271 display in patient vicinity.

- Any use for primary diagnostics is the sole responsibility of the hospital or clinic operator only.

MDview Series Displays may be used as a component within a medical system or a PACS diagnostics workstation. Any required re-certification process to comply with the EU directive 92/42/EC for medical devices is however within the responsibility of the system/workstation supplier.

MDview 232/241/271 Product Features

- These MDview Series models come with a factory preset DICOM like gamma correction enabled. This option provides an essential improvement for viewing DICOM compliant medical images. However, this option cannot completely substitute a true DICOM Part 14 GSDF curve.
- Internal programmable 14-bit LUTs allows true DICOM GSDF calibration via software and calibration instrument, complying with the DICOM Part 14 standard.
- Improved Spatial Uniformity using Digital Uniformity Control (DUC).
- Meeting the visual requirements as “AAPM TG18 Secondary Display”.
- Meeting the visual requirements of acceptance tests and constancy tests under DIN V 6868-57 Category B.
- Quick warm-up time (MDview 241/271).
- DisplayPort, which supports 10-bit color depth.
- Accurate color reproduction.
- Picture-in-picture/picture-by-picture dual-screen mode.
- USB hub with two upstream ports.
- Small footprint design.
- Shipping content includes a Software/Utility DVD with:
  - GammaCompMD QA Client calibration software.
  - NEC tested and approved display controller drivers.
  - MDview Series Online User’s Guide - with extended setup information for MDview 232/241/271, as PDF documents.

NOTE: To prevent any un-intentional de-adjustment of optimum settings and calibrated values, NEC Display Solutions Europe highly recommends the activation of the “OSD LOCK OUT with no control” function within the display’s On-Screen-Display (OSD). This operation is described on page 21 of this document.

This User’s Guide refers to the following NEC MDview Series models

- MDview 232 23” Display, 2.1 mega-pixel = 1920 x 1080 resolution (L239TW)

- MDview 241 24” Display, 2.3 mega-pixel = 1920 x 1200 resolution (L240UN)

- MDview 271 27” Display, 3.7 mega-pixel = 2560 x 1440 resolution (L279TV)

Contents

Your new NEC MDview display box* should contain the following:

- MDview display with tilt/swivel/pivot/height adjust stand
- Power Cord
- Video Signal Cable (DVI-D to DVI-D cable)*1
- Video Signal Cable (Mini D-SUB 15 pin to Mini D-SUB 15 pin) (MDview 232/241 only)
- DisplayPort Cable
- USB Cable
- MDview Series Quick Reference Guide
- DVD-ROM "GammaCompMD QA"
- Screw (x 4) (to mount the monitor to a flexible arm (page 8))

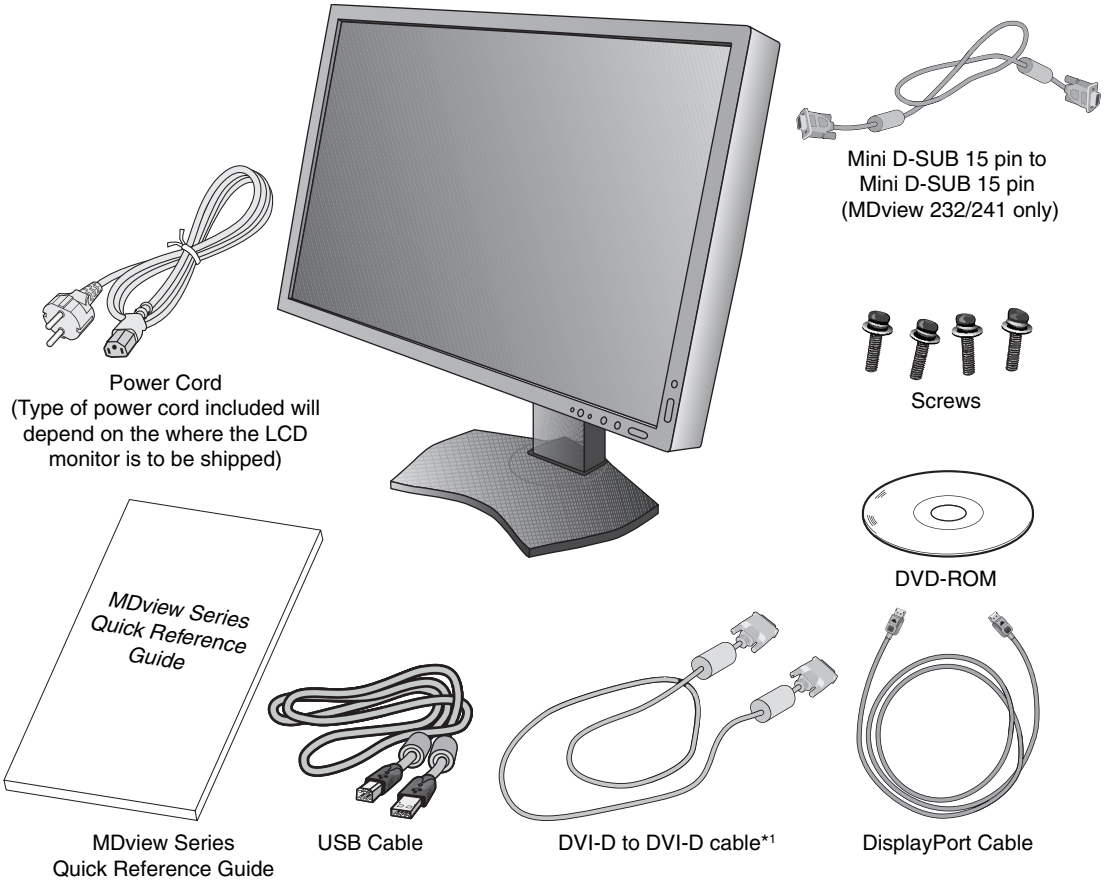

NOTE: This display can be equipped with optional “MultiSync Sound bar”.
Please ask your dealer or check our website http://www.nec-display-solutions.com

* *Remember to save your original box and packing material to transport or ship the monitor.*

*1 Dual link DVI cable for MDview 271.

Quick Start

To connect the LCD monitor to your system, follow these instructions:

1. Turn off the power to your computer.
2. **For a PC or MAC with DVI digital output:** Connect the DVI signal cable to the connector of the display controller in your system (**Figure A.1**). Tighten all screws.

   For a PC with Analog output (MDview 232/241 only): Connect a 15-pin mini D-SUB to DVI-A signal cable (not included) to the connector of the display controller in your system (**Figure A.2**).

   For a MAC (MDview 232/241 only): Connect a Macintosh cable adapter (not included) to the computer, then attach the 15-pin mini D-SUB signal cable to the Macintosh cable adapter (**Figure A.3**).

NOTE: Some Macintosh systems do not require a Macintosh cable adapter.

For a PC with DisplayPort output: Connect the DisplayPort cable to the connector of the display controller in your system (**Figure A.4**).

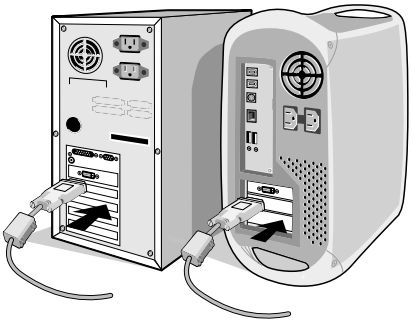

Figure A.1

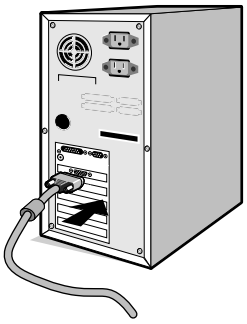

Figure A.2

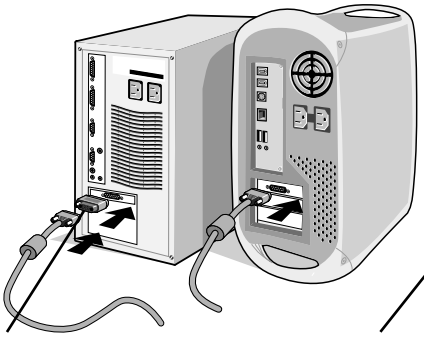

Figure A.3

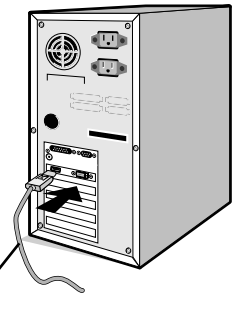

Figure A.4

NOTE:
1. Please use a DisplayPort cable with a DisplayPort logo.
2. When removing the DisplayPort cable, hold down the top button to release the lock.

3. Height adjustment is locked by lock button. Place hand on top of the monitor to push down the screen to the lowest position. Slide the lock button to unlock (**Figure B.1**).

NOTE: Handle with care when unlocking stand.

Place hands on each side of the monitor to tilt the LCD panel 30-degree angle and lift up to the highest position. Slide the cable cover up (**Figure B.2**).

NOTE: Cable cover is not removable.

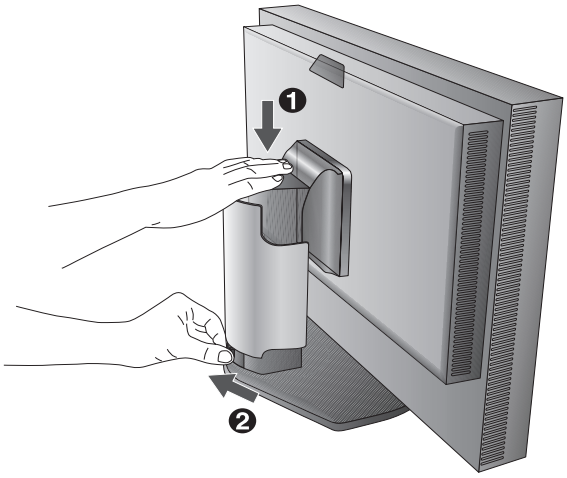

Figure B.1

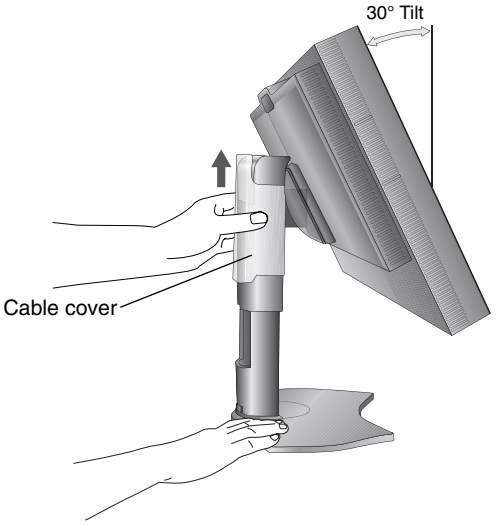

Figure B.2

4. Connect all cables to the appropriate connectors (**Figure C.1**). When using the USB cable, connect the B type connector to the USB upstream port on the right back side of the monitor and the A type connector to the downstream port on the computer (**Figure C.1a**). If using the cord from a USB device, plug into one of the downstream ports of the monitor.

NOTE: Incorrect cable connections may result in irregular operation, damage display quality/components of the LCD module and/or shorten the module's life.

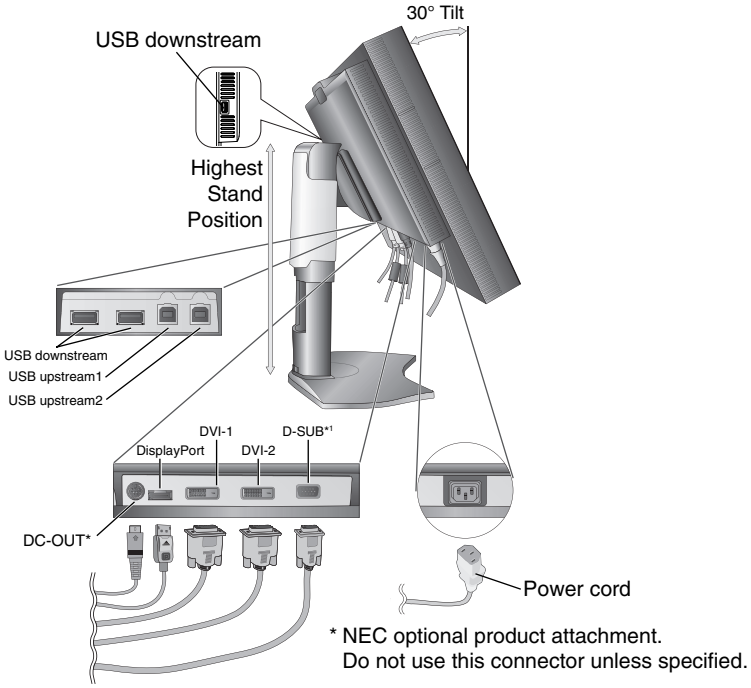

Figure C.1

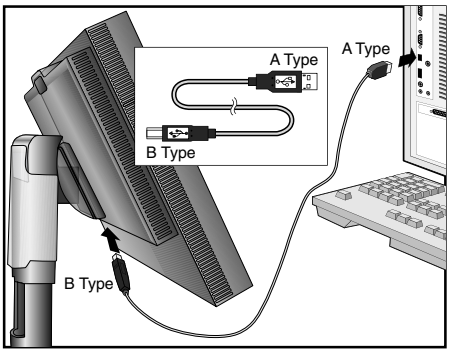

Figure C.1a

5. To keep the cables neatly organized, place them into the cable management system that is built into the stand. Place the cables in the hooks firmly and evenly (**Figure C.2** and **Figure C.3**).
6. Please check that you can still rotate, raise and lower the monitor screen when you have installed the cables.

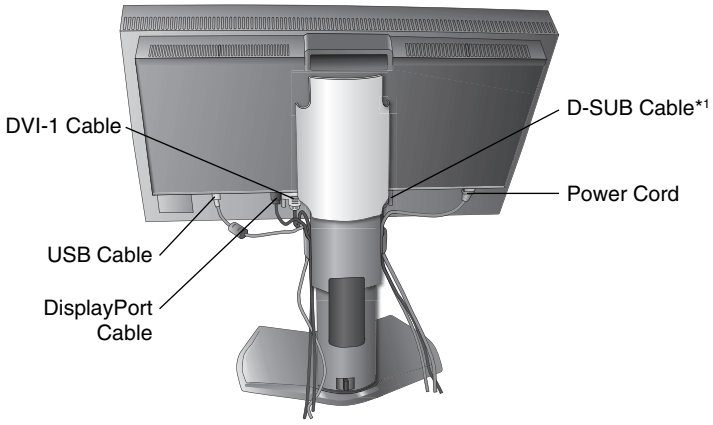

Figure C.2

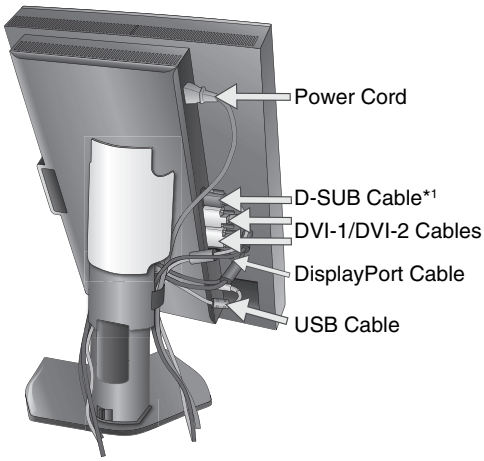

Figure C.3

*1 MDview 232/241 only.

7. Slide down the cable cover (**Figure D.1**).
8. Connect one end of the power cord to the AC inlet on the back of the monitor and the other end to the power outlet.

NOTE: Please refer to the Caution section of this manual for proper selection of AC power cord.

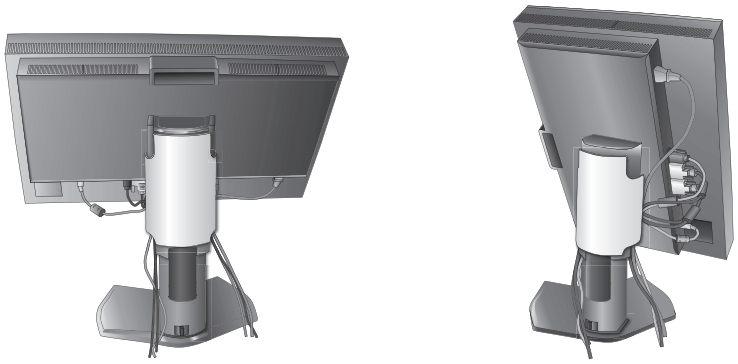

Figure D.1

9. Turn on the monitor with the front power button (**Figure E.1**) and the computer.
10. **MDview 232/241 only:** No-touch auto adjust automatically adjusts the monitor to optimal settings upon initial setup for most timings. For further adjustments, use the following OSD controls:
    - Auto Contrast (Analog input only)
    - Auto Adjust (Analog input only)

    Refer to the **Controls** section of this User's Manual for a full description of these OSD controls.

NOTE: If you have any problems, please refer to the **Troubleshooting** section of this User's Manual.

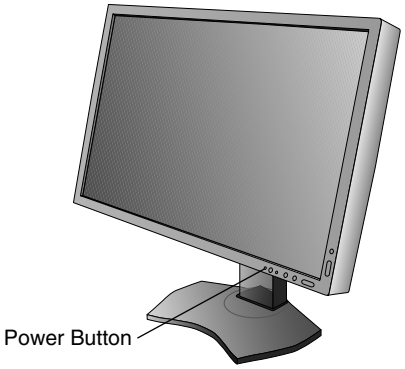

Figure E.1

Raise and Lower Monitor Screen

The monitor may be raised or lowered in either Portrait or Landscape mode.
To raise or lower screen, place hands on each side of the monitor and lift or lower to the desired height (**Figure RL.1**).

NOTE: Handle with care when raising or lowering the monitor screen.

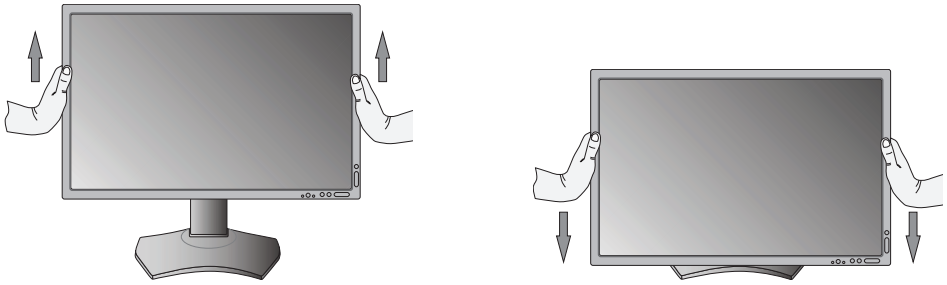

Figure RL.1

Screen Rotation

Before rotating, the screen must be raised to the highest level and tilt to avoid knocking the screen on the desk or pinching your fingers. Disconnect all cables.
To raise the screen, place hands on each side of the monitor and lift up to the highest position (**Figure RL.1**).
To rotate screen, place hands on each side of the monitor screen and turn clockwise from Landscape to Portrait or counter-clockwise from Portrait to Landscape (**Figure R.1**).
To rotate OSD menu between landscape and portrait, refer to “Controls” section.

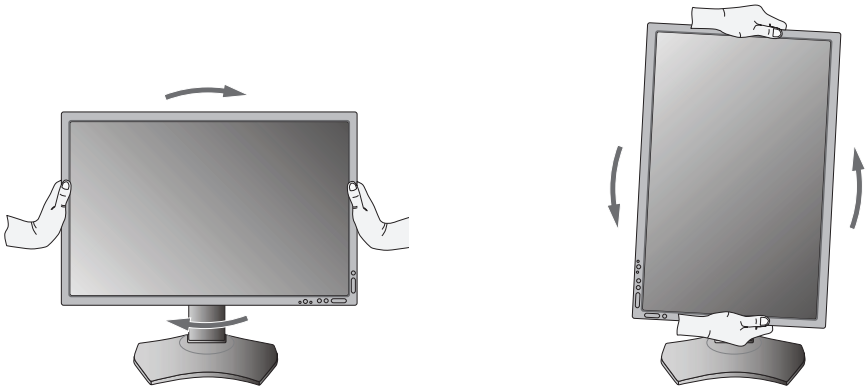

Figure R.1

Tilt

Grasp top and bottom sides of the monitor screen with your hands and adjust the tilt as desired (**Figure TS.1**).

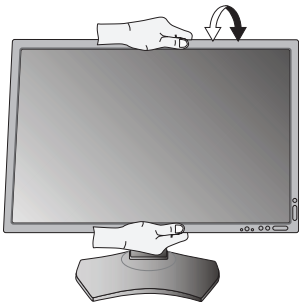

Figure TS.1

NOTE: Handle with care when tilting the monitor screen.

Swivel

Grasp both sides of the monitor screen with your hands and adjust the swivel as desired (**Figure TS.2**).

Figure TS.2

Remove Monitor Stand for Mounting

To prepare the monitor for alternate mounting purposes:

1. Disconnect all cables.
2. Place hands on each side of the monitor and lift up to the highest position.
3. Place monitor face down on a non-abrasive surface (**Figure S.1**).
4. Place one hand around the base and one hand on the Quick Release Lever. Push and hold the Quick Release Lever in the direction indicated by the arrows (**Figure S.1**).
5. Lift up the stand to unhook it from the monitor (**Figure S.1**). The monitor can now be mounted using an alternate method. Reverse process to reattach stand.

NOTE: Handle with care when removing monitor stand.

Figure S.1

Flexible Arm Installation

This LCD monitor is designed for use with a flexible arm.

1. Follow the instructions on how Remove Monitor Stand for Mounting to remove the stand.
2. Using the 4 screws from the stand removal and attach the arm to the monitor (**Figure F.1**).

Caution: Use ONLY the screws (4 pcs) that are included or the screws M4 size (Length: thickness of bracket and washer + 10-12 mm) when mounting to avoid damage to the monitor and stand. To fulfil the safety requirements the monitor must be mounted to an arm which guaranties the necessary stability under consideration of the weight of the monitor. The LCD monitor should only be used with an approved arm (e.g. GS mark).

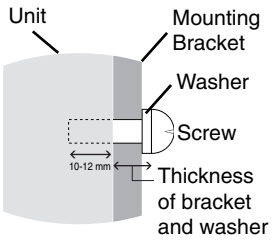

NOTE: Tighten all screws.
(recommended Fasten Force: 98 - 137N•cm)

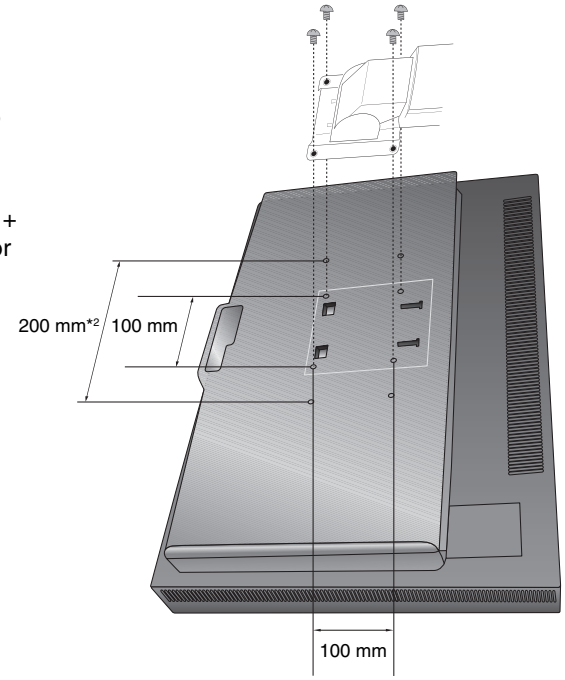

Weight of LCD assembly: 7.0 kg (MDview 232)
7.4 kg (MDview 241)
9.6 kg (MDview 271)

Figure F.1

*2 MDview 271 only.

Controls

OSD (On-Screen Display) control buttons on the front of the monitor function as follows:

To access OSD menu, press the MENU button.
To change signal input, press the SELECT button.

NOTE: OSD must be closed in order to change signal input.

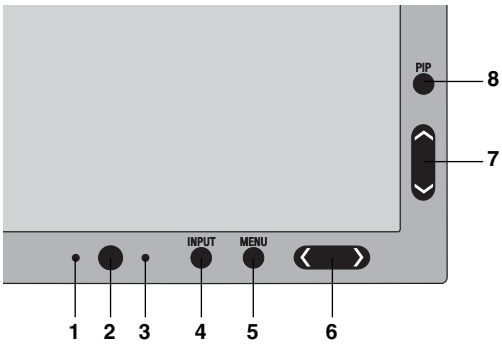

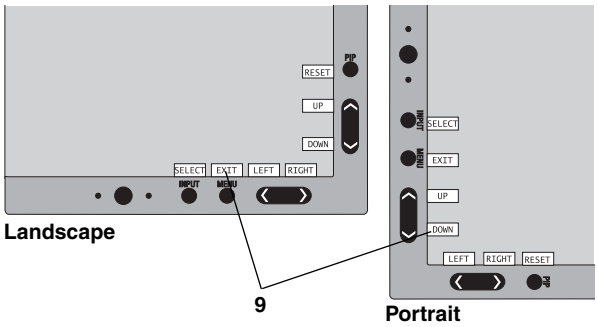

1 AUTO DIMMING SENSOR	Detects the level of ambient lighting allowing the monitor to make adjustments to various settings resulting in a more comfortable viewing experience. Do not cover this sensor.
2 Power	Turns the monitor on and off.
3 LED	Indicates that the power is on. Can be changed between blue and green in the Advanced OSD menu.
4 INPUT/SELECT	Enters the OSD Control menu. Enters OSD sub menus. Changes the input source when not in the OSD Control menu. Hold the button to show USB selection menu when not in the OSD Control menu*1. NOTE: This USB selection setting back to the current setting by OSD menu when you change input signal or turn off the monitor.
5 MENU/EXIT	Access OSD menu. Exits the OSD sub menu. Exits OSD Control menu.
6 LEFT/RIGHT	Navigates to the left or right through the OSD Control menu. You can adjust the brightness directly, while the OSD menu is off*1.
7 UP/DOWN	Navigates up or down through the OSD Control menu. Show Picture Mode menu when not in the OSD Control menu*1, *2.
8 RESET/PIP	Resets the OSD back to factory settings in the OSD control menu. PIP can be selected when the OSD is not showing*3. Hold the button to show ECO Mode menu while the OSD menu is OFF*1.
9 KEY GUIDE	The Key Guide appears on screen when the OSD control menu is accessed. The Key Guide will rotate when the OSD control menu is rotated*.

* The “LEFT/RIGHT” and “UP/DOWN” buttons functionality is interchangeable depending on the orientation (Landscape/Portrait) of the OSD.

*1 When HotKey function is OFF, this function is disabled.

*2 PICTURE MODE menu.
Press the UP/DOWN button to select PICTURE MODE. In PIP or PICTURE BY PICTURE mode, picture mode can be selected for main and sub window independently by pressing Left/Right button.

*3 PIP mode menu.
Press the UP/DOWN button to select sub-window ON/OFF. Press the LEFT/RIGHT button to swap main window and sub window.

Example:
MDview 241

SETTING OSD LANGUAGE

- Use the control keys (LEFT/RIGHT or UP/DOWN or MENU) to access the “LANGUAGE SELECTION” menu.
- Press the LEFT/RIGHT or UP/DOWN buttons to select the desired OSD language.
- To exit from this OSD menu, press EXIT button.

NOTE: The OSD language will stay the same until changed by the user.

Brightness/Contrast Controls

BRIGHTNESS

Adjusts the overall image and background screen brightness.

NOTE: The brightness level is adjusted using the backlight output.
The display will digitally compensate for low or high brightness levels.
If digital compensation occurs, the brightness value on the OSD will change to magenta.

NOTE: The optimal display performance will be in the range where the OSD brightness value is black. When the display cannot achieve the desired brightness, the numerical brightness value on the OSD will blink.

NOTE: For low brightness settings, the display will automatically compensate by adjusting the screen contrast to achieve the desired brightness. This will result in a reduced contrast ratio and the OSD indicator will change to magenta.

NOTE: For high brightness settings, the display will automatically compensate by turning down uniformity compensation in order to achieve the desired brightness. The OSD indicator will change to magenta and this may result in decreased uniformity.

CONTRAST (Analog input only)*1

Adjusts the overall image and background screen brightness by input signal level.

NOTE: It is recommended to use BRIGHTNESS to adjust screen brightness for lower power consumption and improved image quality.

ECO MODE (not recommeded for Medical Environment)

Decreases the amount of power consumed by reducing the brightness level.

OFF: No function.

MODE1: Decreases the brightness range up to about 160 cd/m^2 (MDview 232).
Decreases the brightness range up to about 200 cd/m^2 (MDview 241/271).

MODE2: Decreases the brightness range up to about 100 cd/m^2.

BLACK

Adjusts the black luminance.
When low settings are selected that cannot be displayed, the indicator on the OSD will turn magenta.

Auto Adjust (Analog input only)*1

AUTO ADJUST

Automatically adjusts the Image Position and H. Size settings and Fine settings.

AUTO CONTRAST

Adjusts the image displayed for non-standard video inputs.

Image Controls

LEFT / RIGHT

Controls Horizontal Image Position within the display area of the LCD.

DOWN / UP

Controls Vertical Image Position within the display area of the LCD.

H.SIZE (V.SIZE) (Analog input only)*1

Adjusts the horizontal size by increasing or decreasing this setting.

If the “AUTO Adjust function” do not give you a satisfactory picture setting, a further tuning can be performed using the “H.Size (or V.Size)” function (dot clock). For this a Moiré test pattern could be used. This function may alter the width of the picture. Use Left/Right Menu to center the image on the screen. If the H.Size (or V.Size) is wrongly calibrated, the result would look like the left drawing. The image should be homogeneous.

When H.SIZE value is wrong. → When H.SIZE value is improved. → When H.SIZE value is correct.

*1 MDview 232/241 only.

FINE (Analog input only)*1

Improves focus, clarity and image stability by increasing or decreasing this setting.

If the “Auto Adjust function” and the “H.Size” function do not give you a satisfactory picture setting, a fine tuning can be performed using the “Fine” function.

For this a Moiré test pattern could be used. If the Fine value is wrongly calibrated, the result would look like the left drawing. The image should be homogeneous.

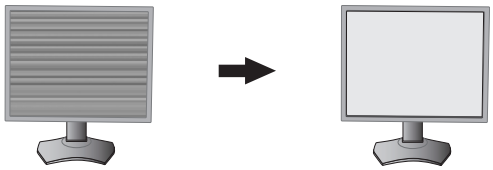

When FINE value is wrong. When FINE value is correct.

AUTO FINE (Analog input only)*1

This function automatically and periodically adjusts the “FINE” setting for change in signal condition.
This function adjusts approximately every 33 minutes.

EXPANSION

Sets the zoom method.

FULL: The image is expanded to full screen, regardless of the resolution.

ASPECT: The image is expanded without changing the aspect ratio.

OFF: The image is not expanded.

CUSTOM: Refer to the Advanced OSD menu for detailed instructions.

SHARPNESS

This function is digitally capable of keeping crisp image at any time. It is continuously adjustable to get as distinct or as soft an image as your prefer and set independently by different timings.

Color Control Systems

PICTURE MODE

Change the Picture mode that is most suitable for the type of content that is shown. You can change up to 5 types.
See Advanced menu Tag1 PICTURE MODE (page 16) and “Using the PICTURE MODE function” (page 15) for more information.

WHITE

Adjust the white temperature by NATIVE or increasing or decreasing this setting. A lower color temperature will make the screen reddish and a higher color temperature will make the screen bluish. NATIVE is the default color temperature of the LCD panel.

ADJUST

HUE: Adjusts the hue of each color*2. The change in color will appear on screen and the menu color bars will show the amount of adjustment.

OFFSET: Adjusts the color brightness of each color*2. Press “RIGHT” button and the color brightness increases.

SATURATION: Adjusts the color depth of each color*2. Press the “RIGHT” button and the color vividness increases.

*2: RED, YELLOW, GREEN, CYAN, BLUE and MAGENTA.

ADVANCED SETTING

Shows ADVANCED MENU. See page 16 for detailed information. Set PICTURE MODE in detail in Advanced OSD Tag1.

*1 MDview 232/241 only.

Tools

PIP MODE

Select PIP MODE, OFF/PIP/PICTURE BY PICTURE - ASPECT/PICTURE BY PICTURE - FULL.
You can select individual PICTURE MODE in each screen.
This display can display 2 inputs at a time.

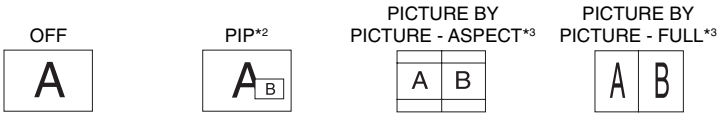

IMAGE ROTATION: ON

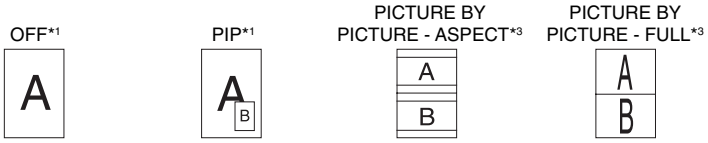

PIP INPUT

Selects the PIP input signal.

PIP LEFT/RIGHT

Controls the horizontal position of the Picture in Picture window in PIP mode.

PIP DOWN/UP

Controls the vertical position of the Picture in Picture window in PIP mode.

PIP SIZE

Selects the size of the sub-picture used in PIP mode.

USB SELECTION

Change USB upstream input associated with the current display input, 1 or 2. When connecting a computer to each of the upstream ports, the monitor's USB downstream ports can be used by selecting this setting for the current input signal.
You can change the active display and upstream USB port combination by using the Input button (see page 9).
You can set the USB selection for each input signals in Advanced OSD (see page 20).
When using only one upstream port, the connected upstream port is used by default.

NOTE: To avoid data loss, before changing USB upstream ports, ensure that no USB storage devices are in use by the operating system of the computer attached to the USB upstream port.

EDID EXTENSION (DVI Input Only)

A communication setting with input device, containing signal timing.

NORMAL: When a PC or other computer equipment is connected, select “NORMAL”.

ENHANCED: Alternate setting for non-PC devices such as DVD players or game consoles. When a DVD player or other type of high definition device is connected, select “ENHANCED”.

NOTE: Interlaced signals (480i, 576i, 1080i) are not supported. If you have any problems, please refer to the Troubleshooting section of this User’s Guide.
When EDID EXTENSION has been changed, the connected equipment has to be restarted.

VIDEO DETECT

Selects the method of video detection when more than one video input is connected.

FIRST: When current video input signal is not present, then the monitor searches for a video signal from the other video input port. If the video signal is present in the other port, then the monitor switches the video source input port to the new found video source automatically. The monitor will not look for other video signals while the current video source is present.

LAST: When the monitor is displaying a signal from the current source and a new secondary source is supplied to the monitor, then the monitor will automatically switch to the new video source. When current video input signal is not present, then the monitor searches for a video signal from the other video input port. If the video signal is present in the other port, then the monitor switches the video source input port to the new found video source automatically.

NONE: The Monitor will not search the other video input port unless the monitor is turned on.

*1 MDview 232/241 only.
*2 Sub Window by DisplayPort or DVI-1 is displayed on Left Half Side only. Sub Window by DVI2 is displayed on Right Half Side only (MDview 271 only).
*3 When Main Window is DVI-2, it is impossible to select PBP - ASPECT/FULL. And, when PICTURE BY PICTURE - ASPECT/FULL is selected, it is impossible to change the Main Window Input to DVI-2. If DVI signal and PICTURE BY PICTURE are used, please connect to DVI-1 input for Main Window (MDview 271 only).

OFF TIMER

The monitor will automatically power-down when the end user has selected a pre-determined amount of time. Before powering off, a message will appear on the screen asking the user if they want to delay the turn off time by 60 minutes. Press any OSD button to delay the power-down time.

OFF MODE

The Intelligent Power Manager allows the monitor to enter into a power saving mode after a period of inactivity.

The OFF MODE has three settings.

OFF: Monitor does not go into power save mode when the input signal is lost.

STANDARD: Monitor enters power save mode automatically when the input signal is lost.

OPTION: Monitor enters power save mode automatically when the amount of surrounding light goes below the level that is determined by the user. The level can be adjusted in Tag 6 of the Advanced OSD menu.

When in power save mode, the LED on the front of the monitor blinks amber. While in power save mode, push any of the front buttons, except for POWER and SELECT to return to normal.

When the amount of surrounding light returns to normal levels, the monitor will automatically return to normal mode.

MENU Tools

LANGUAGE

OSD control menus are available in nine languages.

OSD LEFT/RIGHT

You can choose where you would like the OSD control image to appear on your screen. Selecting OSD Location allows you to manually adjust the position of the OSD control menu left or right.

OSD DOWN/UP

You can choose where you would like the OSD control image to appear on your screen. Selecting OSD Location allows you to manually adjust the position of the OSD control menu Up or Down.

OSD TURN OFF

The OSD control menu will stay on as long as it is use. You can select how long the monitor waits after the last touch of a button to shut off the OSD control menu. The preset choices are 10-120 seconds by 5-second increments.

OSD LOCK OUT

This control completely locks out access to all OSD control functions. When attempting to activate OSD controls while in the Lock Out mode, a screen will appear indicating the OSD controls are locked out.

There are four types of OSD LOCK OUT:

OSD LOCK OUT with no control: To activate the OSD Lock Out function, press SELECT, then “Right” button and hold down simultaneously. To deactivate the OSD Lock Out, press SELECT, then “Right” button and hold down simultaneously while in the OSD menu. No controls can be adjusted while in the lock out mode.

OSD LOCK OUT with BRIGHTNESS (only) control: To activate the OSD Lock Out function, press SELECT, then “Down” and “Left” buttons and hold down simultaneously. To deactivate the OSD Lock Out, press SELECT, then “Down” and “Left” buttons and hold down simultaneously while in the OSD menu. BRIGHTNESS can be adjusted while in this lock out mode.

CUSTOM: Refer to the Advanced OSD Menu.

OSD TRANSPARENCY

Adjusts the transparency of the OSD Menu.

OSD COLOR

Adjusts the color of the OSD Menu. “Tag window frame color”, “Item select color” and “Adjust window frame color” can be changed to Red, Green, Blue, or Gray.

RESOLUTION NOTIFIER

This optimal resolution is 1920 x 1080 for MDview 232, 1920 x 1200 for MDview 241 or 2560 x 1440 for MDview 271. If ON is selected, a message will appear on the screen after 30 seconds, notifying you that the resolution is not at 1920 x 1080 for MDview 232, 1920 x 1200 for MDview 241 or 2560 x 1440 for MDview 271.

HOT KEY

You can adjust the BRIGHTNESS directly. When this function is set to ON, you can adjust the brightness with “Left” or “Right”, while the OSD menu is off. The standard OSD can be accessed with the EXIT button. When this function is set to OFF, some buttons are disabled (see page 9).

FACTORY PRESET

Selecting Factory Preset allows you to reset all OSD control settings (BRIGHTNESS, CONTRAST*1, ECOMODE, BLACK, IMAGE CONTROL, COLOR CONTROL SYSTEM, SHARPNESS, PIP MODE, PIP INPUT, PIP LEFT/RIGHT, PIP DOWN/UP, PIP SIZE, USB SELECTION, EDID EXTENSION, OFF TIMER, OFF MODE, OSD LEFT/RIGHT, OSD UP/DOWN, OSD TURN OFF, OSD TRANSPARENCY) back to the factory settings. Individual settings can be reset by highlighting the control to be reset and pressing the RESET button.

NOTE: If you want reset to include the Picture calibration settings and SELF COLOR CORRECTION settings, please use Factory Preset in the Advanced OSD menu (see page 21).

ECO Information

CARBON SAVINGS: Displays the estimated carbon savings information in kg.

COST: Displays the electricity cost savings in balance.

CARBON CONVERT SETTING: Adjusts the carbon footprint factor in the carbon saving calculation. This initial setting is based on the OECD (2008 Edition).

CURRENCY SETTING: Displays electricity pricing (available in 6 currency units).

CURRENCY CONVERT SETTING: Allows for localization of the electricity costs for accurate information in the electrical rate savings.

NOTE: This model's initial setting is Currency = US$ and its Currency Convert setting = $0.11.
This setting can be changed by using the ECO information menu.
If you want to use the French setting, please refer to steps below:

1. Open menu by pressing the Menu button and select the ECO information menu using the left or right key.
2. Select Currency setting item pressing the Up or Down key.
3. The French currency unit is Euro (€). You can adjust currency setting to Euro icon (€) from US dollar ($) using the Left or Right key in Current setting item.
4. Select Currency Convert Setting item using the Up or Down key.
   This initial Euro (€) setting is Germany of OECD (2007 Edition).
   Please check receipt of French's electricity prices or OECD data for French.
   French of OECD (2007 Edition) was €0.12.
5. Adjust Currency Convert Setting item using the Right or Left key.

Information

Provides information about the current resolution display (Main picture), current USB input setting and technical data including the preset timing being used and the horizontal and vertical frequencies. Indicates the model and serial numbers of your monitor.

OSD Warning

OSD Warning menus disappear with EXIT button.

NO SIGNAL: This function gives a warning when there is no Horizontal or Vertical Sync. After power is turned on or when there is a change of input signal, the **No Signal** window will appear.

RESOLUTION NOTIFIER: This function warms if resolution other than the optimized resolution is used. After power is turned on or when there is a change of input signal or the video signal doesn't have proper resolution, the **Resolution Notifier** window will open. This function can be disabled in the MENU Tools.

OUT OF RANGE: This function gives a recommendation of the optimized resolution and refresh rate. After the power is turned on or there is a change of input signal or if the video signal doesn't have proper timing, the **Out Of Range** menu will appear.

INTERLACED SIGNALS ARE NOT SUPPORTED: This function gives a warning when the interlace signal is used. While the image is visible, change the signal of the device from interlaced to progressive (non-interlaced).
See "No Picture" in Troubleshooting for detailed information.

If you need detailed information about the controls, please use the ADVANCED OSD menu.

*1 MDview 232/241 only.

Using the PICTURE MODE function

Choose the Picture mode that is most suitable for the type of content that is shown.
There are several types of mode (sRGB, Adobe®RGB*2, DCI*2, REC-Bt709, HIGH BRIGHT, FULL, DICOM*3, PROGRAMMABLE).

- Each PICTURE MODE includes BRIGHTNESS, WHITE, Color Gamut, GAMMA, BLACK, UNIFORMITY, COLOR VISION EMU, METAMERISM, RESPONSE IMPROVE settings. You can change these settings in Tag1 advanced menu.

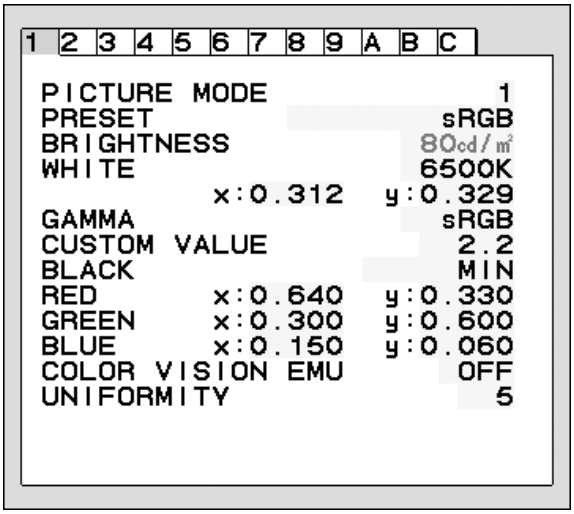

Example: MDview 241/271

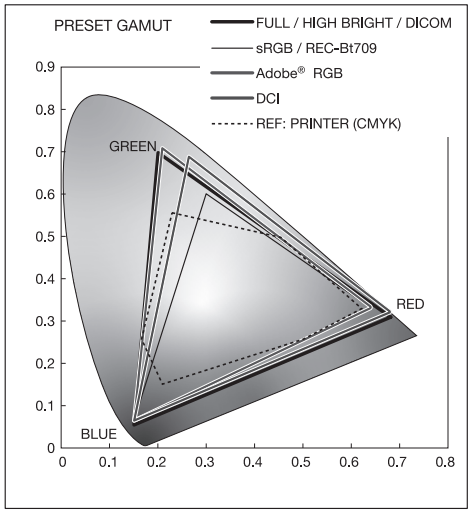

Example: MDview 271

The type of PRESET

PRESET	PURPOSE
sRGB	Standard color space used for the Internet, Windows operating systems and digital cameras. Recommended setting for general color management.
Adobe®RGB*2	Provides a standard color space used in high-end graphics applications such as professional digital still cameras and imaging.
DCI*2	Color setting for digital cinema.
REC-Bt709	Color setting for High-definition television.
HIGH BRIGHT	Factory setting. Highest brightness setting. Provides lowest power consumption when kept at factory setting.
FULL	Native display color gamut. Suitable for use with color managed applications. Use ICC color profile included in the enclosed CD-ROM.
DICOM*3	The setting which conforms to the DICOM standard Grayscale Standard Display Function.
PROGRAMMABLE	For “GammaCompMD QA” software or the Hardware Calibration settings (some OSD settings are disabled).

NOTE:
- When selected PICTURE MODE is different from your computer’s ICC color profile, you may experience inaccurate color reproduction.
- When PICTURE MODE is locked, “PICTURE MODE IS LOCKED” appears on screen. To unlock PICTURE MODE settings, press “SELECT” and “UP” buttons at the same time.

*2 MDview 271 only.
*3 MDview 232 uses “DICOM SIM.”, a value near DICOM gamma.

Advanced OSD

If you need detailed information about the controls, please use the advanced menu.
There are 2 ways to access the advanced menu.

Way 1:

<To access the advanced menu>

- Press the Menu button to access OSD menu. Use the front buttons to move the cursor to the ADVANCED SETTING in Color control systems. Press INPUT button to appear advanced menu.

<To exit the advanced menu>

- Press the EXIT button.

Way 2:

<To access the advanced menu>

- Turn off the monitor.
- Turn on the monitor by pushing the “POWER” and “INPUT/SELECT” button at the same time for at least one second simultaneously. Then press the control buttons (EXIT, LEFT, RIGHT, UP, DOWN).
- The Advanced menu will appear.
  This menu is larger than the normal OSD.

<To exit the advanced menu>

- Turn off and restart the monitor in the normal way.

To make an adjustment, ensure that the tag is highlighted, then press “SELECT”.

To move to another tag, press “EXIT”, then press “Left” or “Right” to highlight another tag.

Tag1	PICTURE MODE	Selects PICTURE MODE, one of 1 to 5.
	PRESET	Sets PICTURE MODE PRESET from the type of PRESET (see page 15).
	BRIGHTNESS*2	Adjusts the overall image and screen background brightness. Press “Left” or “Right” to adjust.
	WHITE	Adjusts the white color by temperature or xy setting. A lower color temperature will make the screen reddish and a higher color temperature will make the screen bluish. A stronger x makes the screen reddish, a stronger y makes it greenish and weak xy makes it a bluish white. 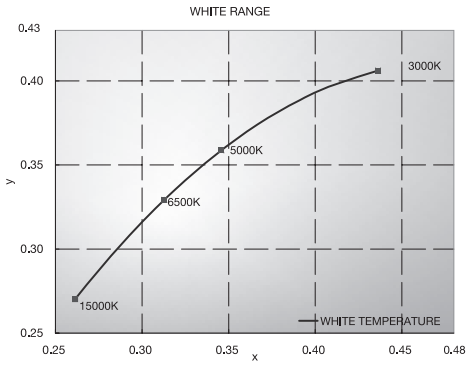

*2 This item will not be reset by FACTORY PRESET (Tag7), when the Auto Brightness is set to “ON”.

	GAMMA	Allows you to manually select the brightness level of grayscale. There are five selections: sRGB, L Star, DICOM*3, PROGRAMMABLE and CUSTOM. We recommend to show grayscale image data on screen. sRGB: GAMMA setting for sRGB. L Star: GAMMA for Lab color space. DICOM*3: DICOM GSDF (Grayscale Standard Display Function) is typically used for medical imaging. PROGRAMMABLE: The brightness of grayscale can be changed to your preference by downloading the application software. You can select this when PICTURE MODE is PROGRAMMABLE. This function could not select on Advanced OSD menu. CUSTOM: CUSTOM VALUE can be adjusted when CUSTOM is selected as the GAMMA SELECTION setting. CUSTOM VALUE: The gamma value is selected from the rate of 0.5 to 4.0 by 0.1 steps. 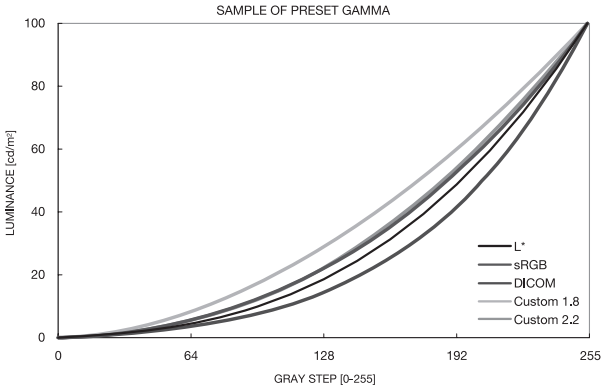
	BLACK	Adjusts the black luminance. When the selected settings are too low to be displayed, the indicator on the OSD will turn magenta.
	RED GREEN BLUE	Adjusts color gamut. When the selected settings are outside of the LCD gamut, the indicator on the OSD will turn magenta. 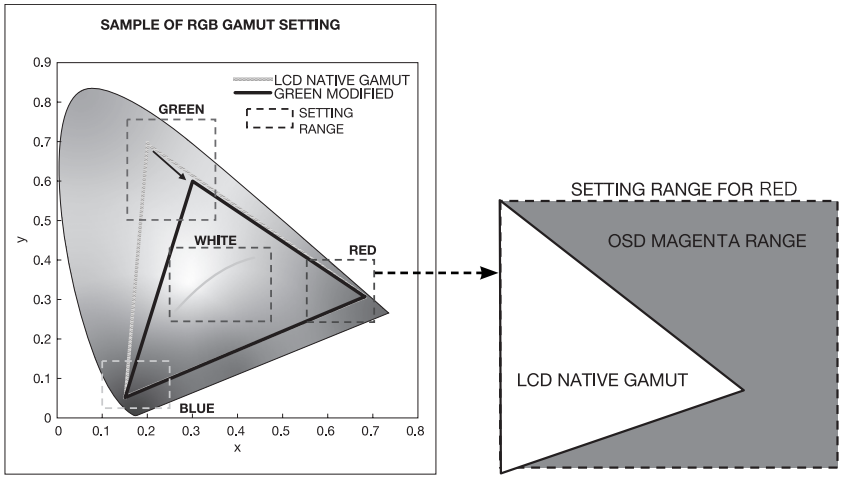
	COLOR VISION EMU	Previews various typical human vision deficiencies and is useful for evaluating how people who have such deficiencies will perceive colors. This preview is available in four modes: Types P (Protanopia), D (Deutanopia) and T (Tritanopia) emulate color vision dichromacy, and Grayscale can be used for evaluating contrast legibility.
	UNIFORMITY	This function electronically compensates for the slight variations in the white uniformity level as well as for deviations in color that may occur throughout the display area of the screen. These variations are characteristic of LCD panel technology. This function improves the color and evens out the luminance uniformity of the display. NOTE: Using the UNIFORMITY feature does reduce the overall peak luminance of the display. If greater luminance is desired over the uniform performance of the display, then UNIFORMITY should be turned off. A higher number produces a better effect, but may also reduce CONTRAST RATIO. When BRIGHTNESS is shown in magenta, the UNIFORMITY setting is automatically changed.

*3 MDview 232 uses “DICOM SIM.”, a value near DICOM gamma.

Tag2	SHARPNESS	This is a digital capability for keeping a crisp image at all signal timings. It continuously adjusts to maintain as distinct or as soft image as you prefer, and is set independently according to different timings. Press “Left” or “Right” to adjust.
	RESPONSE IMPROVE	Turns the Response Improve function on or off. Response Improve may reduce blurring that occurs in some moving images.
	ECO MODE	Decreases the amount of power consumed by reducing the brightness level. OFF: No function. MODE1: Decreases the brightness range up to about 160 cd/m^2 (MDview 232). Decreases the brightness range up to about 200 cd/m^2 (MDview 241/271). MODE2: Decreases the brightness range up to about 100 cd/m^2.
	AUTO BRIGHTNESS	Auto Brightness has three settings. “OFF” is recommended for best color reproduction. OFF: No function. ON: Adjusts the brightness automatically, by detecting the brightness level of your environment and adjusting the monitor with the best BRIGHTNESS setting*1. *1: Please refer to Page 32 for full “Auto Brightness” information. NOTE: Do not cover environmental brightness sensor (AUTO DIMMING sensor).
	METAMERISM	Improves the white point color matching when the display used side-by-side with a standard gamut display monitor. This feature compensates for the way the human eye perceives colors slightly differently compared to the scientific instrument used to adjust the display during calibration.
	AMBIENT LIGHT COMP.	Luminance setting depends on ambient light compensation. Mostly affects black reproduction. NOTE: AUTO DIMMING SENSOR measures ambient brightness when power is on and affects image and color quality settings. Note: Not recommended for use in Medical Environment, as contrast levels will change and decrease the reproduction quality of DICOM images.
	6 - AXIS ADJUST	HUE: Adjusts the hue of each color*1. The change in color will appear on screen and the menu color bars will show the amount of adjustment. SATURATION: Adjusts the color depth of each color*1. Press the “RIGHT” button and the color vividness increases. OFFSET: Adjusts the color brightness of each color*1. Press “RIGHT” button and the color Brightness increases. *1: RED, YELLOW, GREEN, CYAN, BLUE and MAGENTA.
	SHORTCUT CUSTOM	You can select the PICTURE MODE which are displayed in PICTURE MODE shortcut menu.
Tag3	R-H.position*1 (Analog input only)	Adjusts the position of the red component of the image. Press “Left” or “Right” to adjust.
	G-H.position*1 (Analog input only)	Adjusts the position of the green component of the image. Press “Left” or “Right” to adjust.
	B-H.position*1 (Analog input only)	Adjusts the position of the blue component of the image. Press “Left” or “Right” to adjust.
	R-FINE*1 (Analog input only)	Adjusts the “FINE” setting of the RED component of the image. Press “Left” or “Right” to adjust.
	G-FINE*1 (Analog input only)	Adjusts the “FINE” setting of the GREEN component of the image. Press “Left” or “Right” to adjust.
	B-FINE*1 (Analog input only)	Adjusts the “FINE” setting of the BLUE component of the image. Press “Left” or “Right” to adjust.
	R-SHARPNESS*1 (Analog input only)	Adjusts the sharpness of the red component of the image. Press “Left” or “Right” to adjust.
	G-SHARPNESS*1 (Analog input only)	Adjusts the sharpness of the green component of the image. Press “Left” or “Right” to adjust.
	B-SHARPNESS*1 (Analog input only)	Adjusts the sharpness of the blue component of the image. Press “Left” or “Right” to adjust.
	DVI Long Cable (DVI input only)	Compensates for image degradation caused by using a long DVI cable. There are 4 possible settings, with “0” being the lowest level of compensation and “3” being the highest level. The default setting is “1”.

*1 MDview 232/241 only.

<table>
<tr><td rowspan="9">Tag4*1
(Analog input only)</td><td>AUTO ADJUST*2</td><td>Automatically adjusts the Image Position and H.Size settings and Fine settings.
Press “SELECT” to activate Auto Adjustment. Please use test pattern, which is included in the enclosed CD-ROM.</td></tr>
<tr><td>SIGNAL ADJUST</td><td>Determines when the auto adjustment is activated automatically.
The choices are “SIMPLE” and “FULL”. Press “Left” or “Right” to select.
<table>
<tr><td></td><td>H-size, Fine, H/V Position</td><td>Contrast</td></tr>
<tr><td>SIMPLE</td><td>O</td><td>X</td></tr>
<tr><td>FULL</td><td>O</td><td>O</td></tr>
</table>
O: Automatic Adjustment X: No Automatic Adjustment
NOTE: Automatic Adjustment does not work at resolutions less than 800x600 resolution.</td></tr>
<tr><td>AUTO ADJUST LEVEL</td><td>Determines the automatic adjustment level for Auto Adjust. The choices are “SIMPLE”, “FULL” and “DETAIL”. Press “Left” or “Right” to select. Refer to the below table.
<table>
<tr><td></td><td>Size, Fine, Position</td><td>Contrast</td><td>Black Level</td><td>Time</td></tr>
<tr><td>SIMPLE</td><td>O</td><td>X</td><td>X</td><td>1 second</td></tr>
<tr><td>FULL</td><td>O</td><td>O</td><td>X</td><td>1.5 seconds</td></tr>
<tr><td>DETAIL*</td><td>O</td><td>O</td><td>O</td><td>5 seconds</td></tr>
</table>
O: Automatic Adjustment X: No Automatic Adjustment
* “DETAIL” activates automatic long cable (skew, peaking) adjustment.</td></tr>
<tr><td>A-NTAA SW</td><td>The Advanced No Touch Auto Adjust function is able to recognize new signals even when neither the resolution nor the refresh rate has changed. If several PCs are connected to the monitor, and each transmit very similar (or even the same) signals in terms of resolution and refresh rates, the monitor recognizes that there is a new signal and automatically optimizes the picture without the need for any action on the part of the user.
OFF: A-NTAA is disabled.
ON: If a change in signal is detected A-NTAA will adjust the monitor to the optimal settings for the new signal. If no change in the signal is detected then A-NTAA does not activate. The screen will be blank while the monitor optimizes the signal.
OPTION: Functions the same as ON, except that the screen does not go blank when the monitor makes adjustments for changes in signal, allowing the monitor to display the new signal faster. When using an external switching device to connect 2 or more PCs to the monitor, using the ON or OPTION settings is suitable.</td></tr>
<tr><td>AUTO CONTRAST*2</td><td>Adjusts the image displayed for non-standard video inputs. Press “SELECT” to adjust. Any adjustment requires the image to have white portions.</td></tr>
<tr><td>CONTRAST</td><td>Adjusts the image brightness and contrast in relation to the background.
Press “Left” or “Right” to adjust.</td></tr>
<tr><td>AUTO BLACK LEVEL*2</td><td>Automatically adjusts the black level. Any adjustment requires the image to have black portions. Press “SELECT” to activate Auto Adjust.</td></tr>
<tr><td>BLACK LEVEL</td><td>Adjusts the RGB black level by input signal level.</td></tr>
<tr><td rowspan="6">Tag5</td><td>H.POSITION</td><td>Controls Horizontal Image Position within the display area of the LCD.
Press “Left” or “Right” to adjust.</td></tr>
<tr><td>V.POSITION</td><td>Controls Vertical Image Position within the display area of the LCD.
Press “Left” or “Right” to adjust.</td></tr>
<tr><td>H.SIZE*1
(Analog input only)</td><td>Adjusts the horizontal size of the screen.
If the “AUTO Adjust function” do not give you a satisfactory picture setting, a further tuning can be performed using the “H.Size (V.Size)” function (dot clock). For this a Moiré test pattern could be used. This function may alter the width of the picture. Use left/Right Menu to center the image on the screen. If the H.Size (V.Size) is incorrectly calibrated, vertical bands will appear. The image should be homogeneous.</td></tr>
<tr><td>FINE*1
(Analog input only)</td><td>Improve focus, clarity and image stability by increasing or decreasing this setting.
If the “Auto Adjust function” and the “H.Size” function do not give you a satisfactory picture setting, a fine tuning can be performed using the “Fine” function. For this a Moiré test pattern could be used. If the Fine value is incorrectly calibrated, horizontal lines will appear on the display. The image should be homogeneous.</td></tr>
<tr><td>AUTO FINE*1
(Analog input only)</td><td>This function automatically and periodically adjusts the “FINE” setting for change in signal condition. This function adjusts approximately every 33 minutes.</td></tr>
<tr><td>H.RESOLUTION</td><td>Adjusts the horizontal size by increasing or decreasing the setting.
Press “Right” button to expand the width of the image on the screen.
Press “Left” button to narrow the width of the image on the screen.</td></tr>
</table>

*1 MDview 232/241 only.

*2 This item will not be reset by FACTORY PRESET (Tag7).

	V.RESOLUTION	Adjusts the vertical size by increasing or decreasing the setting. Press “Right” button to expand the height of the image on the screen. Press “Left” button to narrow the height of the image on the screen.
	EXPANSION	Sets the zoom method. FULL: The image is expanded to full screen, regardless of the resolution. ASPECT: The image is expanded without changing the aspect ratio. OFF: The image is not expanded. CUSTOM: When CUSTOM is selected as the Expansion mode, it becomes possible to adjust the H. ZOOM., V. ZOOM, and ZOOM POS.
	SIDE BORDER COLOR	Adjusts the side black bars color between black and white.
Tag6	USB SELECTION	USB UP Stream Port Selection for DP/DVI-1/DVI-2/D-SUB. When connecting a computer to each of the upstream ports, the monitor’s USB downstream ports can be used by selecting this setting for the current input signal. When using only one upstream port, the connected upstream port is active. You can change the active display and upstream USB port combination by using the Input button (see page 9). NOTE: To avoid data loss, before changing USB upstream ports, ensure that no USB storage devices are in use by the operating system of the computer attached to the USB upstream port.
	EDID EXTENSION (Digital Input Only)	A communication setting with input device, containing signal timing. NORMAL: When a PC or other computer equipment is connected, select “NORMAL”. Enhanced: Alternate setting for non-PC devices such as DVD players or game consoles. Note: Interlaced signals (480i, 576i, 1080i) are not supported. If you have any problems, please refer to the Troubleshooting section of this User’s Manual. When EDID EXTENSION has been changed, the connected equipment has to be restarted.
	VIDEO DETECT*2	Selects the method of video detection when more than one computer is connected. Press “Left” or “Right” to select. FIRST: When current video input signal is not present, then the monitor searches for a video signal from the other video input port. If the video signal is present in the other port, then the monitor switches the video source input port to the new found video source automatically. The monitor will not look for other video signals while the current video source is present. LAST: When the monitor is displaying a signal from the current source and a new secondary source is supplied to the monitor, then the monitor will automatically switch to the new video source. When current video input signal is not present, then the monitor searches for a video signal from the other video input port. If the video signal is present in the other port, then the monitor switches the video source input port to the new found video source automatically. NONE: The Monitor will not search the other video input port unless the monitor is turned on.
	OFF TIMER	Monitor will automatically turn off after the preset time period from power on with the ON/OFF function. When you select “ON”, press “SELECT” and “Left” or “Right” to adjust. Before powering off, a message will appear on the screen asking the user if they want to delay the turn off time by 60 minutes. Press any OSD button to delay the turn off time.
	OFF MODE	The Intelligent Power Manager allows the monitor to enter into a power saving mode after a period of inactivity. The OFF MODE has three settings. OFF: Monitor does not go into power save mode when the input signal is lost. STANDARD: Monitor enters power save mode automatically when the input signal is lost. OPTION: Monitor enters power save mode automatically when the amount of surrounding light goes below the level that is determined by the user.
	OFF MODE SETTING	Adjusts the ILLUMINANCE value for OFF MODE. Shows illuminance.
	LED BRIGHTNESS*2	Controls the brightness of the power LED on the monitor.
	LED COLOR*2	Toggles the power LED on the front between blue or green.
Tag7	LANGUAGE*2	OSD control menus are available in nine languages. Press “Left” or “Right” to select.
	OSD H.POSITION	You can choose where you would like the OSD control image to appear on your screen. Selecting OSD Location allows you to manually adjust the position of the OSD control menu left or right.

*2 This item will not be reset by FACTORY PRESET (Tag7).

	OSD V.POSITION	You can choose where you would like the OSD control image to appear on your screen. Selecting OSD Location allows you to manually adjust the position of the OSD control menu up or down.
	OSD TURN OFF	The OSD control menu will stay on as long as it is use. You can select how long the monitor waits after the last touch of a button to shut off the OSD control menu. The preset choices are 10-120 seconds in 5 second increments.
	OSD LOCK OUT*2	This control completely locks out access to all OSD control functions. When attempting to activate OSD controls while in the Lock Out mode, a screen will appear indicating the OSD controls are locked out. There are three types of OSD LOCK OUT: OSD LOCK OUT with no control: To activate the OSD Lock Out function, press SELECT, then “Right” button and hold down simultaneously. To deactivate the OSD Lock Out, press SELECT, then “Right” button and hold down simultaneously while in the OSD menu. No controls can be adjusted while in the lock out mode. OSD LOCK OUT with BRIGHTNESS (only) control: To activate the OSD Lock Out function, press SELECT, then “Down” and “Left” buttons and hold down simultaneously. To deactivate the OSD Lock Out, press SELECT, then “Down” and “Left” buttons and hold down simultaneously while in the OSD menu. BRIGHTNESS can be adjusted while in the lock out mode. CUSTOM: Press RESET and EXIT to enter the CUSTOM Menu. Select ENABLE or DISABLE for POWER KEY, INPUT SEL, HOT KEY (BRIGHTNESS), PICTURE MODE, WARNING (RESOLUTION NOTIFIER/OSD LOCK OUT). To Deactivate the OSD Lock Out function, press RESET and EXIT to bring up the LOCK OUT warning. Press SELECT, SELECT, <, >, <, >, EXIT.
	OSD TRANSPARENCY	Adjusts the transparency of the OSD MENU.
	OSD COLOR*2	“Tag window frame color”, “Item select color” & ”Adjust Window frame color” can be changed.
	BOOT LOGO*2	The NEC logo is briefly displayed after the monitor is powered on. This feature can be turned on or off in the OSD. Note: If the “EXIT” button is kept pressed while NEC logo is displayed, the BOOT LOGO menu will appear. It is possible to change the BOOT LOGO setting to OFF.
	SIGNAL INFORMATION*2	Signal information can be displayed in the corner of the screen. Signal information is either “On/Off”.
	RESOLUTION NOTIFIER*2	The optimal resolution is 1920 x 1080 for MDview 232, 1920 x 1200 for MDview 241 or 2560 x 1440 for MDview 271. If ON is selected, a message will appear on the screen after 30 seconds, notifying you that the resolution is not set to 1920 x 1080 for MDview 232, 1920 x 1200 for MDview 241 or 2560 x 1440 for MDview 271. Press “Left” or “Right” to select.
	HOT KEY*2	When this function is activated; the brightness of the monitor can be adjusted without entering the OSD menu by using the front buttons. The “Left” or “Right” buttons adjust the brightness level. When this function is set to OFF, some buttons are disabled. See page 9.
	FACTORY PRESET*2	Selecting Factory Preset allows you to reset all OSD control settings back to the factory settings. Highlighting the control to be reset and pressing the RESET button can reset individual settings.
Tag8	PIP MODE	Selects PIP MODE, OFF/PIP/PICTURE BY PICTURE - ASPECT/PICTURE BY PICTURE - FULL. See page 12.
	PIP INPUT	Selects the PIP input signal.
	PIP LEFT/RIGHT	When you select “PIP” in PIP MODE, you can control horizontal position of PIP display area.
	PIP DOWN/UP	When you select “PIP” in PIP MODE, you can control vertical position of PIP display area.
	PIP SIZE	Selects the size of the sub-picture used in PIP mode.
	BLANK SIGNAL SKIP	Skip no signal inputs when you change input signal with INPUT button.
	OSD ROTATION	AUTO: The OSD rotates automatically when the monitor is rotated. OSD ROTATION is set to AUTO by default. LANDSCAPE: Display the OSD with landscape mode. PORTRAIT: Display the OSD with portrait mode.

*2 This item will not be reset by FACTORY PRESET (Tag7).

	IMAGE ROTATION	AUTO: The display image automatically rotates according to the orientation of the display. If “AUTO” is selected in the “OSD ROTATION” menu, the display image rotates according to the orientation of the monitor. OFF: The display image is not rotated. IMAGE ROTATION is set to OFF by default. ON: The display image always rotated. Note: For MDview 271, this function is effective only if PICTURE BY PICTURE-ASPECT or PICTURE BY PICTURE-FULL.
	SUB IMAGE ROTATION	AUTO: The sub window image automatically rotates according to the orientation of the display. If “AUTO” is selected in the “OSD ROTATION” menu, the sub window image rotates according to the orientation of the monitor. OFF: The sub window image is not rotated. IMAGE ROTATION is set to OFF by default. ON: The sub window image always rotated.
	DDC/CI	DDC/CI ENABLE/DISABLE: Turns on or off the two way communication and control with connected PC by video cable. NOTE: Set DDC/CI to ENABLE when using hardware calibration software like MultiProfiler over DisplayPort, DVI or VGA.
	SCREEN SAVER	Use the SCREEN SAVER to reduce the risk of image persistence. MOTION (Default OFF): Screen image moves periodically in 4 directions in order to reduce the risk of image retention. Timing for MOTION can be set so the screen image moves in intervals from every 10 to 900 seconds. Timing is set in 10-second increments. OPTION (Default REDUCED): There are two optional selections. REDUCED: Screen image is reduced to 95% size and is moved periodically in 4 directions. Screen may appear slightly less sharp than normal. The full image appears on the display. NOTE: Some input signals may not be supported by REDUCED. FULL: Screen image is set to FULL and is moved periodically in 4 directions. Screen image goes outside of the display area in the direction that it shifts so that a portion of the image may appear to be cut off. NOTE: SCREEN SAVER works when ENABLE is OFF in TILE MATRIX and PIP MODE is OFF.
Tag9	INPUT SETTING*1, *2	Video Band Width: Reduce the visual “noise” level of the input signal. It is strong ineffective, so that a number becomes small. Press “Left” or “Right” to select. Sync Threshold: Adjusts the slice level of a synchronization signal. Press “SELECT” to move the adjustment menu. Adjusts the sensitivity of the separate or composite input signals. Try this option if the FINE adjustment does not successfully eliminate the noise. SOG Threshold: Adjusts the sensitivity of the Sync On Green input signals. Adjusts the slice level when separating synchronization from sync On Green signal input. Press “Left” or “Right” to select. Clamp position: Operating your monitor at a non-standard timing may cause images to appear darker than normal or have color distortion. Use of the Clamp position control will adjust images to their normal state.

*1 MDview 232/241 only.

*2 This item will not be reset by FACTORY PRESET (Tag7).

TagA	TILE MATRIX	The Tile Matrix feature allows one image to be displayed over multiple screens. This feature can be used with up to 25 monitors (5 vertical and 5 horizontal). Using Tile Matrix requires the PC output signal be sent through a distribution amplifier to each individual monitor. H MONITOR: Select the number of horizontal displays. V MONITOR: Select the number of vertical displays. MONITOR No: Select a position to expand the screen. TILE COMP: Works in tandem with Tile Matrix to compensate for the width of the tile bezels in order to accurately display the image. Tile Comp with 4 monitors (black area shows monitor frames): 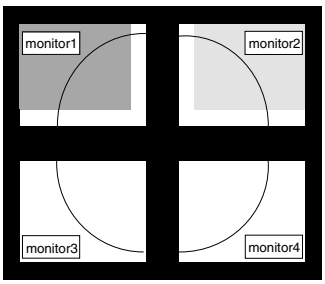 Tile Comp OFF 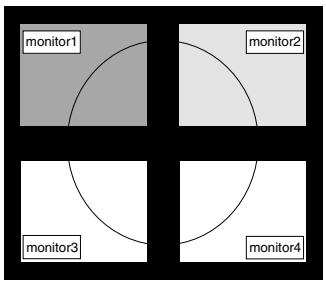 Tile Comp ON NOTE: TILE MATRIX works only when PIP MODE is OFF.
TagB	CARBON SAVING	Displays the estimated carbon savings information in kg.
	COST	Displays the electricity cost savings in balance.
	CARBON CONVERT SETTING	Adjusts the carbon footprint factor in the carbon saving calculation. This initial setting is based on the OECD (2008 Edition).
	CURRENCY SETTING*2	Displays electricity pricing (available in 6 currency units).
	CURRENCY CONVERT SETTING	Adjusts electricity prices-electric energy equivalent in the electrical rate saving calculation.
	HOURS RUNNING*2	Show total running time.
	SELF COLOR CORRECTION*3	Compensates for typical a LCD yellowish color shift due to long-term usage by internal color sensor. This takes approximately 30 to 60 minutes depending on warm up time to complete.
TagC	INFORMATION*2	Provides information about the current display resolution. Technical data, including the preset timing currently being used and the horizontal and vertical frequencies is also displayed.

*2 This item will not be reset by FACTORY PRESET (Tag7).

*3 MDview 241/271 only.

General recommendations

Safety Precautions and Maintenance

FOR OPTIMUM PERFORMANCE, PLEASE NOTE
THE FOLLOWING WHEN SETTING UP AND
USING THE LCD COLOR MONITOR:

- **DO NOT OPEN THE MONITOR.** There are no user serviceable parts inside and opening or removing covers may expose you to dangerous shock hazards or other risks. Refer all servicing to qualified service personnel.
- Do not spill any liquids into the cabinet or use your monitor near water.
- Do not insert objects of any kind into the cabinet slots, as they may touch dangerous voltage points, which can be harmful or fatal or may cause electric shock, fire or equipment failure.
- Do not place any heavy objects on the power cord. Damage to the cord may cause shock or fire.
- Do not place this product on a sloping or unstable cart, stand or table, as the monitor may fall, causing serious damage to the monitor.
- The power supply cord you use must have been approved by and comply with the safety standards of your country. (Type H05VV-F 3G 1mm^2 should be used in Europe).
- In UK, use a BS-approved power cord with molded plug having a black (5A) fuse installed for use with this monitor.
- Do not place any objects onto the monitor and do not use the monitor outdoors.
- The lamps in this product contain mercury. Please dispose according to state, local or federal law.
- Do not bend power cord.
- Do not use monitor in high temperatured, humid, dusty, or oily areas.
- Do not cover vent on monitor.
- Vibration can damage the backlight. Do not install where the monitor will be exposed to continual vibration.
- If monitor or glass is broken, do not come in contact with the liquid crystal and handle with care.

Immediately turn off the power, unplug your monitor from the wall outlet and move to a safe location then refer servicing to qualified service personnel under the following conditions. If the monitor is used in this condition, the monitor may cause fall, fire and electric shock:

- If the monitor stand has been cracked or peeled.
- If the monitor has been wobbled.
- If the monitor has an unusual odor.
- When the power supply cord or plug is damaged.
- If liquid has been spilled, or objects have fallen into the monitor.
- If the monitor has been exposed to rain or water.
- If the monitor has been dropped or the cabinet damaged.
- If the monitor does not operate normally by following operating instructions.

CAUTION

- Allow adequate ventilation around the monitor so that heat can properly dissipate. Do not block ventilated openings or place the monitor near a radiator or other heat sources. Do not put anything on top of monitor.
- The power cable connector is the primary means of detaching the system from the power supply. The monitor should be installed close to a power outlet which is easily accessible.
- Handle with care when transporting. Save packaging for transporting.
- Do not touch LCD panel surface while transporting, mounting and setting. Applying pressure on the LCD panel can cause serious damage.

Image Persistence: Image persistence is when a residual or “ghost” image of a previous image remains visible on the screen. Unlike CRT monitors, LCD monitors’ image persistence is not permanent, but constant images being displayed for a long period of time should be avoided.

To alleviate image persistence, turn off the monitor for as long as the previous image was displayed. For example, if an image was on the monitor for one hour and a residual image remains, the monitor should be turned off for one hour to erase the image.

NOTE: As with all personal display devices, NEC DISPLAY SOLUTIONS recommends using a moving screen saver at regular intervals whenever the screen is idle or turning off the monitor when not in use.

CORRECT PLACEMENT AND ADJUSTMENT OF THE MONITOR CAN REDUCE EYE, SHOULDER AND NECK FATIGUE. CHECK THE FOLLOWING WHEN YOU POSITION THE MONITOR:

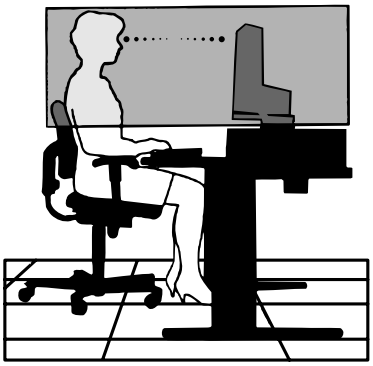

- For optimum performance, allow 20 minutes for the display to warm up.
- Adjust the monitor height so that the top of the screen is at or slightly below eye level. Your eyes should look slightly downward when viewing the middle of the screen.
- Position your monitor no closer than 40 cm (15.75 inches) and no further away than 70 cm (27.56 inches) from your eyes. The optimal distance is 50 cm (19.69 inches).
- Rest your eyes periodically by focusing on an object at least 20 feet away. Blink often.
- Position the monitor at a 90° angle to windows and other light sources to minimize glare and reflections. Adjust the monitor tilt so that ceiling lights do not reflect on your screen.
- If reflected light makes it hard for you to see your screen, use an anti-glare filter.
- Clean the LCD monitor surface with a lint-free, non-abrasive cloth. Avoid using any cleaning solution or glass cleaner!
- Adjust the monitor's brightness and contrast controls to enhance readability.
- Use a document holder placed close to the screen.
- Position whatever you are looking at most of the time (the screen or reference material) directly in front of you to minimize turning your head while you are typing.
- Avoid displaying fixed patterns on the monitor for long periods of time to avoid image persistence (after-image effects).
- Get regular eye checkups.

Ergonomics

To realize the maximum ergonomics benefits, we recommend the following:

- To avoid eye fatigue, adjust the brightness to a moderate setting. Place a sheet of white paper next to the LCD screen for luminance reference.
- Do not position the Contrast control to its maximum setting.
- Use the preset Size and Position controls with standard signals.
- Use the preset Color Setting.
- Use non-interlaced signals with a vertical refresh rate of more than 60 Hz.
- Do not use primary color blue on a dark background, as it is difficult to see and may produce eye fatigue due to insufficient contrast.

Cleaning the LCD Panel

- When the LCD is dusty, please gently wipe with a soft cloth.
- Please do not rub the LCD panel with hard or coarse material.
- Please do not apply pressure to the LCD surface.
- Please do not use OA cleaner as it will cause deterioration or discoloration on the LCD surface.

Cleaning the Cabinet

- Unplug the power supply
- Gently wipe the cabinet with a soft cloth
- To clean the cabinet, dampen the cloth with a neutral detergent and water, wipe the cabinet and follow with a dry cloth.

NOTE: Plastic material is used on the surface of the cabinet. DO NOT clean with benzene, thinner, alkaline detergent, alcoholic system detergent, glass cleaner, wax, polish cleaner, soap powder, or insecticide. Do not touch rubber or vinyl to the cabinet for a long time. These types of fluids and fabrics can cause the paint to deteriorate, crack or peel.

Specifications - MDview 232

Monitor Specifications		MDview 232 (L239TW)	Notes
LCD Module	Diagonal: Viewable Image Size: Native Resolution (Pixel Count):	58.4 cm/23.0 inches 58.4 cm/23.0 inches 1920 x 1080	Active matrix; thin film transistor (TFT) liquid crystal display (LCD); 0.265 mm dot pitch; 250 cd/m^2 white luminance; 1000:1 contrast ratio (typical).
Input Signal			
DisplayPort:	DisplayPort Connector:	Digital RGB	DisplayPort Complies with Standard V1.1a, applicable to HDCP
DVI:	DVI-D 24pin:	Digital RGB	DVI (HDCP)
VGA:	15pin Mini D-sub:	Analog RGB Sync	0.7 Vp-p/75 ohm Separate sync.TTL level Positive/Negative Composite sync.TTL level Positive/Negative Sync on Green (Video 0.7 Vp-p and Sync Negative 0.3 Vp-p)
HDMI:	HDMI Connector:	Digital RGB	HDMI (HDCP)
Display Colours		1,073,741,824 (DisplayPort/HDMI 10 bit) 16,777,216 (DVI)	Depends on display card used.
Synchronization Range	Horizontal: Vertical:	31.5 kHz to 83.0 kHz, 118.4 kHz*2 (Analog) 31.5 kHz to 83.0 kHz, 118.4 kHz*2 (Digital) 50 Hz to 85 Hz	Automatically Automatically Automatically
Viewing Angle	Left/Right: Up/Down:	±89° (CR > 10) ±89° (CR > 10)	
Image Formation Time		14 ms (Typ.)	8 ms (Gray to gray Typ)
Resolutions Supported (Some systems may not support all modes listed).		640 x 480*1 at 60 Hz to 85 Hz 720 x 350*1 at 70 Hz to 85 Hz 720 x 400*1 at 70 Hz to 85 Hz 800 x 600*1 at 56 Hz to 85 Hz 832 x 624*1 at 75 Hz 1024 x 768*1 at 60 Hz to 85 Hz 1152 x 864*1 at 70 Hz to 85 Hz 1152 x 870*1 at 75 Hz 1152 x 900*1 at 66 Hz 1280 x 960*1 at 60 Hz 1280 x 1024*1 at 60 Hz to 85 Hz 1400 x 1050*1 at 60 Hz to 75 Hz 1440 x 900*1 at 60 Hz to 85 Hz 1600 x 900*1 at 60 Hz 1680 x 1050*1 at 60 Hz 1920 x 1080 at 60 Hz 1024 x 1280*1 at 60 Hz 1080 x 1920*1 at 60 Hz 480P (720 x 480*1 at 60 Hz) 576P (720 x 576*1 at 50 Hz) 720P (1280 x 720*1 at 50 Hz to 60 Hz) 1080P (1920 x 1080*1 at 50 Hz to 60 Hz)	NEC DISPLAY SOLUTIONS cites recommended resolution for optimal display performance.
Active Display Area	Landscape: Horiz.: Vert.: Portrait: Horiz.: Vert.:	509.2 mm/20.0 inches 286.4 mm/11.3 inches 286.4 mm/11.3 inches 509.2 mm/20.0 inches	
USB Hub	I/F: Port: Load Current:	USB Specification Revision 2.0 Upstream 2 Downstream 3 Maximum 0.5A per port	
Power Supply		AC 100-240 V ~ 50/60 Hz	
Current Rating		0.94 - 0.35 A (with option)	
Dimensions	Landscape: Portrait: Height Adjustment:	543.6 mm (W) x 338 - 488 mm (H) x 227.6 mm (D) 21.4 inches (W) x 13.3 - 19.2 inches (H) x 9.0 inches (D) 322.4 mm (W) x 559.2 - 598.6 mm (H) x 227.6 mm (D) 12.7 inches (W) x 22.0 - 23.6 inches (H) x 9.0 inches (D) 150 mm / 5.9 inches (Landscape orientation) 39.4 mm / 1.6 inches (Portrait orientation)	
Weight		9.2 kg (20.3 lbs)	
Environmental Considerations	Operating Temperature: Humidity: Altitude: Storage Temperature: Humidity: Altitude:	5°C to 35°C/41°F to 95°F 30% to 80% 0 to 6,562 Feet/0 to 2,000 m -10°C to 60°C/14°F to 140°F 10% to 85% 0 to 40,000 Feet/0 to 12,192 m	

*1 Interpolated Resolutions: When resolutions are shown that are lower than the pixel count of the LCD module, text may appear different. This is normal and necessary for all current flat panel technologies when displaying non-native resolutions full screen. In flat panel technologies, each dot on the screen is actually one pixel, so to expand resolutions to full screen, an interpolation of the resolution must be done.
*2 1080 x 1920 resolution only.

NOTE: Technical specifications are subject to change without notice.

Specifications - MDview 241

Monitor Specifications		MDview 241 (L240UN)	Notes
LCD Module	Diagonal: Viewable Image Size: Native Resolution (Pixel Count):	61.1 cm/24.1 inches 61.1 cm/24.1 inches 1920 x 1200	Active matrix; thin film transistor (TFT) liquid crystal display (LCD); 0.270 mm dot pitch; 360 cd/m² white luminance; 1000:1 contrast ratio (typical).
Input Signal			
DisplayPort:	DisplayPort Connector:	Digital RGB	DisplayPort Complies with Standard V1.1a, applicable to HDCP
DVI:	DVI-D 24pin:	Digital RGB	DVI (HDCP)
VGA:	15pin Mini D-sub:	Analog RGB Sync	0.7 Vp-p/75 ohm Separate sync.TTL level Positive/Negative Composite sync.TTL level Positive/Negative Sync on Green (Video 0.7 Vp-p and Sync Negative 0.3 Vp-p)
Display Colours		1,073,741,824 (DisplayPort 10 bit) 16,777,216 (DVI)	Depends on display card used.
Synchronization Range	Horizontal: Vertical:	31.5 kHz to 93.8 kHz, 118.4 kHz*2 (Analog) 31.5 kHz to 91.1 kHz, 118.4 kHz*2 (Digital) 50 Hz to 85 Hz	Automatically Automatically Automatically
Viewing Angle	Left/Right: Up/Down:	±89° (CR > 10) ±89° (CR > 10)	
Image Formation Time		16 ms (Typ.)	8 ms (Gray to gray Typ)
Resolutions Supported (Some systems may not support all modes listed).		640 x 480*1 at 60 Hz to 85 Hz 720 x 350*1 at 70 Hz to 85 Hz 720 x 400*1 at 70 Hz to 85 Hz 800 x 600*1 at 56 Hz to 85 Hz 832 x 624*1 at 75 Hz 1024 x 768*1 at 60 Hz to 85 Hz 1152 x 864*1 at 70 Hz to 85 Hz 1152 x 870*1 at 75 Hz 1152 x 900*1 at 66 Hz 1280 x 960*1 at 60 Hz 1280 x 1024*1 at 60 Hz to 85 Hz 1400 x 1050*1 at 60 Hz to 75 Hz 1440 x 900*1 at 60 Hz to 85 Hz 1600 x 1200*1 at 60 Hz to 75 Hz (Analog), 1600 x 1200*1 at 60 Hz (Digital) 1680 x 1050*1 at 60 Hz 1920 x 1200 at 60 Hz 1024 x 1280*1 at 60 Hz 1200 x 1920*1 at 60 Hz 480P (720 x 480*1 at 60 Hz) 576P (720 x 576*1 at 50 Hz) 720P (1280 x 720*1 at 50 Hz to 60 Hz) 1080P (1920 x 1080*1 at 50 Hz to 60 Hz)	NEC DISPLAY SOLUTIONS cites recommended resolution for optimal display performance.
Active Display Area	Landscape: Horiz.: Vert.: Portrait: Horiz.: Vert.:	518 mm/20.4 inches 324 mm/12.8 inches 324 mm/12.8 inches 518 mm/20.4 inches	
USB Hub	I/F: Port: Load Current:	USB Specification Revision 2.0 Upstream 2 Downstream 3 Maximum 0.5A per port	
Power Supply		AC 100-240 V ~ 50/60 Hz	
Current Rating		1.38 - 0.56A (with option)	
Dimensions	Landscape: Portrait: Height Adjustment:	556.8 mm (W) x 378 - 528 mm (H) x 227.6 mm (D) 21.9 inches (W) x 14.9 - 20.8 inches (H) x 9.0 inches (D) 362.4 mm (W) x 572.4 - 625.2 mm (H) x 227.6 mm (D) 14.3 inches (W) x 22.5 - 24.6 inches (H) x 9.0 inches (D) 150 mm / 5.9 inches (Landscape orientation) 52.8 mm / 2.1 inches (Portrait orientation)	
Weight		10.6 kg (23.4 lbs)	
Environmental Considerations			
	Operating Temperature: Humidity: Altitude: Storage Temperature: Humidity: Altitude:	5°C to 35°C/41°F to 95°F 30% to 80% 0 to 6,562 Feet/0 to 2,000 m -10°C to 60°C/14°F to 140°F 10% to 85% 0 to 40,000 Feet/0 to 12,192 m	

*1 Interpolated Resolutions: When resolutions are shown that are lower than the pixel count of the LCD module, text may appear different. This is normal and necessary for all current flat panel technologies when displaying non-native resolutions full screen. In flat panel technologies, each dot on the screen is actually one pixel, so to expand resolutions to full screen, an interpolation of the resolution must be done.
*2 1200 x 1920 resolution only.

NOTE: Technical specifications are subject to change without notice.

Specifications - MDview 271

Monitor Specifications	MDview 271 (L279TV)	Notes
LCD Module Diagonal: Viewable Image Size: Native Resolution (Pixel Count):	68.5 cm/27.0 inches 68.5 cm/27.0 inches 2560 x 1440	Active matrix; thin film transistor (TFT) liquid crystal display (LCD); 0.233 mm dot pitch; 300 cd/m^2 white luminance; 1000:1 contrast ratio (typical).
Input Signal		
DisplayPort: DisplayPort Connector:	Digital RGB	DisplayPort Complies with Standard V1.1a, applicable to HDCP
DVI: DVI-D 24pin:	Digital RGB	DVI (HDCP)
Display Colours	1,073,741,824	Depends on display card used.
Synchronization Range Horizontal: Vertical:	31.5 kHz to 93.9 kHz 50 Hz to 87 Hz	Automatically Automatically
Viewing Angle Left/Right: Up/Down:	±89° (CR > 10) ±89° (CR > 10)	
Image Formation Time	12 ms (Typ.)	7 ms (Gray to gray Typ)
Resolutions Supported (Some systems may not support all modes listed).	640 x 480*1 at 60 Hz to 85 Hz 720 x 350*1 at 70 Hz to 85 Hz 720 x 400*1 at 70 Hz to 85 Hz 800 x 600*1 at 56 Hz to 85 Hz 832 x 624*1 at 75 Hz 1024 x 768*1 at 60 Hz to 85 Hz 1152 x 864*1 at 70 Hz to 85 Hz 1152 x 870*1 at 75 Hz 1152 x 900*1 at 66 Hz 1280 x 960*1 at 60 Hz 1280 x 1024*1 at 60 Hz to 85 Hz 1400 x 1050*1 at 60 Hz to 75 Hz 1440 x 900*1 at 60 Hz to 85 Hz 1600 x 1200*1 at 60 Hz 1680 x 1050*1 at 60 Hz 1920 x 1200*1 at 60 Hz 1024 x 1280*1 at 60 Hz 1200 x 1920*1 at 60 Hz 2560 x 1440 at 60 Hz..... 480P (720 x 480*1 at 60 Hz) 576P (720 x 576*1 at 50 Hz) 720P (1280 x 720*1 at 50 Hz to 60 Hz) 1080P (1920 x 1080*1 at 50 Hz to 60 Hz)	NEC DISPLAY SOLUTIONS cites recommended resolution for optimal display performance.
Active Display Area Landscape: Horiz.: Vert.: Portrait: Horiz.: Vert.:	597 mm/23.5 inches 336 mm/13.2 inches 336 mm/13.2 inches 597 mm/23.5 inches	
USB Hub I/F: Port: Load Current:	USB Specification Revision 2.0 Upstream 2 Downstream 3 Maximum 0.5A per port	
Power Supply	AC 100-240 V ~ 50/60 Hz	
Current Rating	1.64 - 0.65 A (with option)	
Dimensions Landscape: Portrait: Height Adjustment:	640.4 mm (W) x 396.2 - 546.2 mm (H) x 235.5 mm (D) 25.2 inches (W) x 15.6 - 21.5 inches (H) x 9.3 inches (D) 378.6 mm (W) x 658.0 - 677.1 mm (H) x 235.5 mm (D) 14.9 inches (W) x 25.9 - 26.7 inches (H) x 9.3 inches (D) 150 mm / 5.9 inches (Landscape orientation) 19.1 mm / 0.8 inches (Portrait orientation)	
Weight	13.6 kg (30.0 lbs)	
Environmental Considerations Operating Temperature: Humidity: Altitude: Storage Temperature: Humidity: Altitude:	 5°C to 35°C/41°F to 95°F 30% to 80% 0 to 10,000 Feet/0 to 3,048 m -10°C to 60°C/14°F to 140°F 10% to 85% 0 to 40,000 Feet/0 to 12,192 m	

*1 Interpolated Resolutions: When resolutions are shown that are lower than the pixel count of the LCD module, text may appear different. This is normal and necessary for all current flat panel technologies when displaying non-native resolutions full screen. In flat panel technologies, each dot on the screen is actually one pixel, so to expand resolutions to full screen, an interpolation of the resolution must be done.

NOTE: Technical specifications are subject to change without notice.

Features

DisplayPort: DisplayPort is designed to be the future-ready, scalable solution for high performance digital display connectivity. It enables the highest resolutions, the fastest refresh rates and deepest color depths over standard cables.

DFP (Digital Flat Panel): An all-digital interface for flat panel monitors which is signal compatible with DVI. As a DVI-based digital only connection, only a simple adapter is necessary for compatibility between DFP and other DVI-based digital connectors such as DVI and P&D.

P&D (Plug and Display): The VESA standard for digital flat panel monitor interfaces. It is more robust than DFP since it allows for other options off a signal connector (options like USB, analog video and IEEE-1394-995). The VESA committee has recognized that DFP is a subset of P&D. As a DVI-based connector (for the digital input pins), only a simple adapter is necessary for compatibility between P&D and other DVI-based digital connector such as DVI and DFP.

Pivoting Stand: Allows users to adjust the monitor to the orientation that best fits their application, either Landscape orientation for wide documents, or Portrait orientation for the ability to preview a full page on one screen at one time. The Portrait orientation is also perfect for full screen video conferencing.

Reduced Footprint: Provides the ideal solution for environments requiring superior image quality but with size and weight limitations. The monitor's small footprint and low weight allow it to be moved or transported easily from one location to another.

Color Control Systems: Allows you to adjust the colors on your screen and customize the color accuracy of your monitor to a variety of standards.

Natural Color Matrix: Combines Six-axis color control and the sRGB standard. Six-axis color control permits color adjustments via six axes (R, G, B, C, M and Y) rather than through the three axes (R, G and B) previously available. The sRGB standard provides the monitor with a uniform color profile. This assures that the colors displayed on the monitor are exactly the same as on the color printout (with sRGB supporting operating system and sRGB printer). This allows you to adjust the colors on your screen and customise the color accuracy of your monitor to a variety of standards.

OSD (On-Screen Display) Controls: Allow you to quickly and easily adjust all elements of your screen image via simple to use on-screen menus.

ErgoDesign Features: Enhanced human ergonomics to improve the working environment, protect the health of the user and save money. Examples include OSD controls for quick and easy image adjustments, tilt base for preferred angle of vision, small footprint and compliance with MPRII and TCO guidelines for lower emissions.

Plug and Play: The Microsoft® solution with the Windows® operating system facilitates setup and installation by allowing the monitor to send its capabilities (such as screen size and resolutions supported) directly to your computer, automatically optimizing display performance.

Intelligent Power Manager System: Provides innovative power-saving methods that allow the monitor to shift to a lower power consumption level when on but not in use, saving two-thirds of your monitor energy costs, reducing emissions and lowering the air conditioning costs of the workplace.

Multiple Frequency Technology: Automatically adjusts monitor to the display card's scanning frequency, thus displaying the resolution required.

FullScan Capability: Allows you to use the entire screen area in most resolutions, significantly expanding image size.

Wide Viewing Angle Technology: Allows the user to be able to see the monitor from any angle (178°) from any orientation — Portrait or Landscape. Provides full 178° viewing angles either up, down, left or right.

VESA Standard Mounting Interface: Allows users to connect their MultiSync monitor to any VESA standard third party mounting arm or bracket. Allows for the monitor to be mounted on a wall or an arm using any third party compliant device.

No-touch Auto Adjust*1 (Analog input only): No-touch auto adjust automatically adjusts the monitor to optimal settings upon initial setup.

sRGB Color Control: A new optimized color management standard which allows for color matching on computer displays and other peripherals. The sRGB, which is based on the calibrated color space, allows for optimal color representation and backward compatibility with other common color standards.

UNIFORMITY: This feature compensates for slight variations in the white uniformity level that may occur on the screen and improves the color and evens out the luminance uniformity of the display.

Response Improve: Improved gray to gray response.

Adjustable stand with pivot capability: Adds flexibility to your viewing preferences.

Quick Release stand: Allows fast removal.

Auto dimming technology: Automatically adjusts the backlight level depending on the level of ambient lighting.

USB 2.0 hub adds excitement to your computing by connecting you to digital cameras, scanners and more.

*1 MDview 232/241 only.

Troubleshooting

No picture

- The signal cable should be completely connected to the display card/computer.
- The display card should be completely seated in its slot.
- The monitor does not support DisplayPort converter signal.
- Front Power Switch and computer power switch should be in the ON position.
- Check to make sure that a supported mode has been selected on the display card or system being used. (Please consult display card or system manual to change graphics mode.)
- Check the monitor and your display card with respect to compatibility and recommended settings.
- Check the signal cable connector for bent or pushed-in pins.
- Check the signal input, “DVI-D”, “DisplayPort” or “D-Sub”.
- If the front LED is blinking amber, check the status of the OFF MODE mode (see page 13).
- When using a DVD player or any other type of high-definition device, please do not use interlaced signals. If the monitor detects an interlaced signal, an OSD warning will appear. If this OSD warning appears, please do the following: press the RESET and EXIT buttons simultaneously, to temporarily show the image coming from the high-definition device. While the image is visible, change the signal of the device from interlaced to progressive (non-interlaced). Consult the User’s Manual included with the device for detailed information on changing the signal from interlaced to progressive.

Power Button does not respond

- Unplug the power cord of the monitor from the AC outlet to turn off and reset the monitor.

Image Persistence

- Image persistence is when a residual or “ghost” image of a previous image remains visible on the screen. Unlike CRT monitors, LCD monitors’ image persistence is not permanent, but constant images being displayed for a long period of time should be avoided. To alleviate image persistence, turn off the monitor for as long as the previous image was displayed. For example, if an image was on the monitor for one hour and a residual image remains, the monitor should be turned off for one hour to erase the image.

NOTE: As with all personal display devices, NEC DISPLAY SOLUTIONS recommends using a moving screen saver at regular intervals whenever the screen is idle or turning off the monitor when not in use.

Picture is discolored

- Make sure COLOR VISION EMU is OFF.
- Make sure PICTURE MODE setting is same as ICC profile on PC.
- Set SELF COLOR CORRECTION.
- When using an analog input, display the test pattern included in the enclosed CD-ROM and set AUTO ADJUST*1.

Color irregularities on screen

- Reduce BRIGHTNESS.
- Set UNIFORMITY level between “2” and “5”.

Image is flickering

- When using an analog input, display the test pattern included in the enclosed DVD-ROM and set AUTO ADJUST*1.

Message “OUT OF RANGE” is displayed (screen is either blank or shows rough images only)

- Image is displayed only roughly (pixels are missing) and OSD warning “OUT OF RANGE” is displayed: Either signal clock or resolution is too high. Choose one of the supported modes.
- OSD warning “OUT OF RANGE” is displayed on a blank screen: Signal frequency is out of range. Choose one of the supported modes.

Image is unstable, unfocused or swimming is apparent

- Signal cable should be completely attached to the computer.
- Use the OSD Image Adjust controls to focus and adjust display by increasing or decreasing the fine adjustment. When the display mode is changed, the OSD Image Adjust settings may need to be readjusted.
- Check the monitor and your display card with respect to compatibility and recommended signal timings.
- If your text is garbled, change the video mode to non-interlace and use 60Hz refresh rate.

LED on monitor is not lit (*no green, blue or amber color can be seen*)

- Power Switch should be in the ON position and power cord should be connected.

Picture is not as bright

- Make sure ECO MODE and AUTO BRIGHTNESS are turned off.
- If the brightness fluctuates make sure AUTO BRIGHTNESS is turned off.
- In PICTURE MODE, set HI-BRIGHT. See page 15.
- LCD brightness degradation occurs due to long-term usage or extreme cold conditions.
- When the display cannot achieve the desired brightness, the numerical brightness value on the OSD will blink.

*1 MDview 232/241 only.

Display image is not sized properly

- Use the OSD Image Adjust controls to increase or decrease the Coarse adjustment.
- Check to make sure that a supported mode has been selected on the display card or system being used. (Please consult display card or system manual to change graphics mode.)

No Video

- If no video is present on the screen, turn the Power button off and on again.
- Make certain the computer is not in a power-saving mode (touch the keyboard or mouse).
- Some video cards do not output video signal when monitor is turned OFF/ON or disconnect/connect from the AC power cord under low resolution with DisplayPort.
- If no video is present on the screen, check the status of the EDID EXTENSION in the User menu (see page 12), the setting may need to be changed to allow HDCP content to be displayed.

Brightness variations over time

- Change Auto Brightness to OFF and adjust brightness.

NOTE: When Auto Brightness is set to ON, the monitor automatically adjusts brightness based on the environment. When the brightness of surrounding environment changes, the monitor will also change.

Self Diagnosis

- The LCD display is equipped with the ability to self diagnose abnormalities. When the LCD detects a problem, the LED on the front flashes in a pattern of long and short blinks, depending on the type of problem detected.
- If the LED signals a problem, please refer service to qualified personnel.

USB Hub does not operate

- Check to make sure the USB cord is properly connected. Refer to your USB devise User's Manual.
- Make sure correct upstream is selected on USB hub setting (see page 12).
- Disconnect one upstream USB cable when using 2 upstream.

Using the Auto Brightness function

NOTE: Not recommended for use in Medical Environment, as contrast levels will change and decrease the reproduction quality of DICOM images.

The brightness of the LCD screen can be set to increase or decrease depending on the amount of ambient light within the room. If the room is bright, the monitor becomes correspondingly bright. If the room is dim, then the monitor will dim accordingly. The purpose of this function is to make the viewing experience more comfortable to the eye in a variety of lighting conditions.

MDview 232/241/271: The Auto Brightness function is set to OFF by default.

SETUP

Use the following procedure to select the Brightness Range that the monitor will use when the Auto Brightness function is activated.

1. Set the BRIGHT level. This is the brightness level that the monitor will go up to when the ambient light level is highest. Make sure the room is at its brightest when setting this level.

   Select “ON” in the AUTO BRIGHTNESS menu (**Figure 1**). Then use the front buttons to move the cursor up to the BRIGHTNESS setting. Choose the desired brightness level (**Figure 2**).
2. Set the DARK level. This is the level of brightness that the monitor will go down to when the ambient light level is low. Make sure the room is at its darkest when setting this level.

   Then use the front buttons to move the cursor up to the BRIGHTNESS setting. Choose the desired brightness level (**Figure 3**).

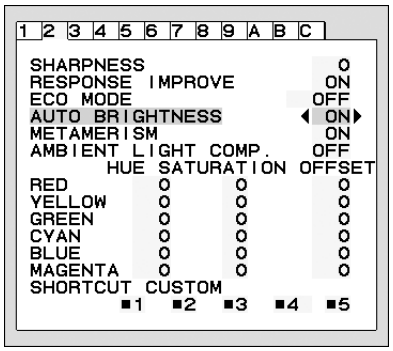

Figure 1

Example: MDview 241/271

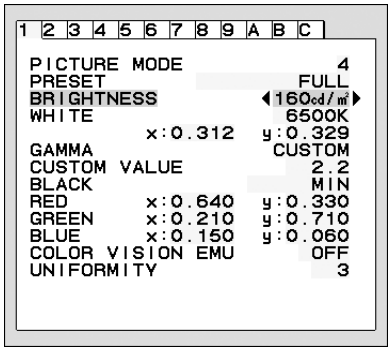

Figure 2

Example: MDview 241/271

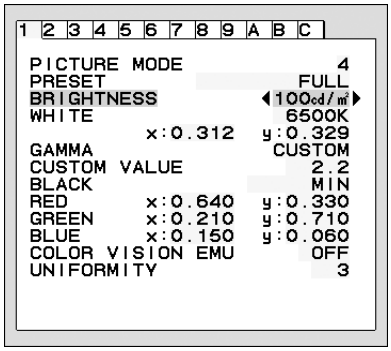

Figure 3

When the “Auto Brightness” function is enabled the Brightness level of the screen changes automatically according to the lighting conditions of the room (**Figure 4**).

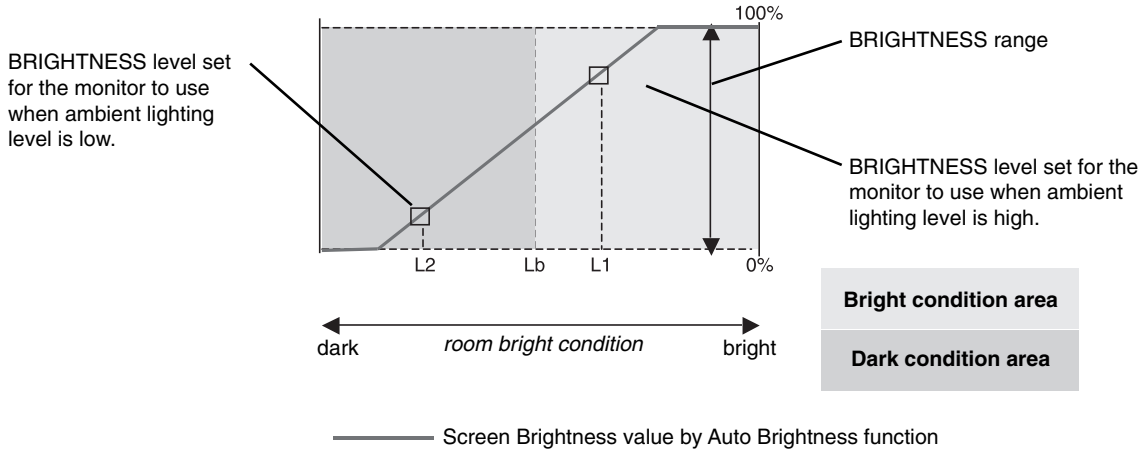

Figure 4

Lb: Border between bright and dim lighting conditions; set at factory
L1: BRIGHTNESS level set for the monitor to use when ambient lighting level is high (L1>Lb)
L2 : BRIGHTNESS level set for the monitor to use when ambient lighting level is low (L2<Lb)

L1 and L2 are the brightness levels set by the user to compensate for changes in ambient lighting.

TCO'03 (for MDview 241/271)

TCO Development

Congratulations!

The display you have just purchased carries the TCO'03 Displays label. This means that your display is designed, manufactured and tested according to some of the strictest quality and environmental requirements in the world. This makes for a high performance product, designed with the user in focus that also minimizes the impact on our natural environment.

Some of the features of the TCO'03 Display requirements:

Ergonomics

- Good visual ergonomics and image quality in order to improve the working environment for the user and to reduce sight and strain problems. Important parameters are luminance, contrast, resolution, reflectance, color rendition and image stability.

Energy

- Energy-saving mode after a certain time – beneficial both for the user and the environment
- Electrical safety

Emissions

- Electromagnetic fields
- Noise emissions

Ecology

- The product must be prepared for recycling and the manufacturer must have a certified environmental management system such as EMAS or ISO 14 001
- Restrictions on:
  - chlorinated and brominated flame retardants and polymers
  - heavy metals such as cadmium, mercury and lead.

The requirements included in this label have been developed by TCO Development in co-operation with scientists, experts, users as well as manufacturers all over the world. Since the end of the 1980s TCO has been involved in influencing the development of IT equipment in a more user-friendly direction. Our labelling system started with displays in 1992 and is now requested by users and IT-manufacturers all over the world.

For more information, please visit
www.tcodevelopment.com

Congratulations!

This display is designed for both you and the planet!

The display you have just purchased carries the TCO Certified label. This ensures that your display is designed, manufactured and tested according to some of the strictest quality and environmental requirements in the world. This makes for a high performance product, designed with the user in focus that also minimizes the impact on the climate and our natural environment.

TCO Certified is a third party verified program, where every product model is tested by an accredited impartial test laboratory. TCO Certified represents one of the toughest certifications for displays worldwide.

Some of the Usability features of the TCO Certified for displays:

- Good visual ergonomics and image quality is tested to ensure top performance and reduce sight and strain problems. Important parameters are luminance, contrast, resolution, black level, gamma curve, color and luminance uniformity, color rendition and image stability.
- Product have been tested according to rigorous safety standards at an impartial laboratory.
- Electric and magnetic fields emissions as low as normal household background levels.
- Low acoustic noise emissions.

Some of the Environmental features of the TCO Certified for displays:

- The brand owner demonstrates corporate social responsibility and has a certified environmental management system (EMAS or ISO 14001).
- Very low energy consumption both in on- and standby mode minimize climate impact.
- Restrictions on chlorinated and brominated flame retardants, plasticizers, plastics and heavy metals such as cadmium, mercury and lead (RoHS compliance).
- Both product and product packaging is prepared for recycling.
- The brand owner offers take-back options.

The requirements can be downloaded from our web site. The requirements included in this label have been developed by TCO Development in co-operation with scientists, experts, users as well as manufacturers all over the world. Since the end of the 1980s TCO has been involved in influencing the development of IT equipment in a more user-friendly direction. Our labeling system started with displays in 1992 and is now requested by users and IT-manufacturers all over the world. About 50% of all displays worldwide are TCO certified.

For more information, please visit
www.tcodevelopment.com

Technology for you and the planet

Manufacturer's Recycling and Energy Information

NEC DISPLAY SOLUTIONS is strongly committed to environmental protection and sees recycling as one of the company's top priorities in trying to minimize the burden placed on the environment. We are engaged in developing environmentally-friendly products, and always strive to help define and comply with the latest independent standards from agencies such as ISO (International Organisation for Standardization) and TCO (Swedish Trades Union).

Disposing of your old NEC product

The aim of recycling is to gain an environmental benefit by means of re-use, upgrading, reconditioning or reclamation of material. Dedicated recycling sites ensure that environmentally harmful components are properly handled and securely disposed. To ensure the best recycling of our products, **NEC DISPLAY SOLUTIONS offers a variety of recycling procedures** and gives advice on how to handle the product in an environmentally sensitive way, once it has reached the end of its life.

All required information concerning the disposal of the product and country-specific information on recycling facilities can be found on our following websites:

http://www.nec-display-solutions.com/greencompany/ (in Europe).

Energy Saving

This monitor features an advanced energy saving capability. When a VESA Display Power Management Signalling (DPMS) Standard signal is sent to the monitor, the Energy Saving mode is activated. The monitor enters a single Energy Saving mode.

Mode	Power consumption	LED colour
Normal Operation (with option)	Approx. 73 W (MDview 232) Approx. 114 W (MDview 241) Approx. 146 W (MDview 271)	Green or blue
Normal Operation (at TCO testing)	Approx. 48 W (MDview 232) Approx. 95 W (MDview 241) Approx. 73 W (MDview 271)	Green or blue
Energy Saving Mode	Less than 1.4 W (MDview 271) Less than 1 W (MDview 232/241)	Amber
Off Mode	Less than 0.2 W	Unlit

WEEE Mark (European Directive 2002/96/EC)

Within the European Union

EU-wide legislation, as implemented in each Member State, requires that waste electrical and electronic products carrying the mark (left) must be disposed of separately from normal household waste. This includes monitors and electrical accessories, such as signal cables or power cords. When you need to dispose of your NEC display products, please follow the guidance of your local authority, or ask the shop where you purchased the product, or if applicable, follow any agreements made between yourself and NEC.

The mark on electrical and electronic products only applies to the current European Union Member States.

Outside the European Union

If you wish to dispose of used electrical and electronic products outside the European Union, please contact your local authority so as to comply with the correct disposal method.