Modular Touch System

User Guide

Table of Contents

1.0 Introduction 6
2.0 Parts Overview 7
2.1 Components 7
3.0 Packaging 9
3.1 Base Kit 9
3.2 Horizontal Expansion Kit 9
3.3 Vertical Expansion Kit 9
4.0 Ordering Information 10
4.1 Identification of Components 10
4.2 Contents of Base Kit 10
4.3 Contents of Horizontal Expansion Kit 13
4.4 Contents of Vertical Expansion Kit 13
4.5 Order Quantities Example 14
4.6 Mounting Hardware 14
5.0 Installation 17
5.1 Required Tools 17
5.2 Layout of Bars 17
5.3 Connecting Bars Together 19
5.4 Connecting Power to the Frame 21
5.5 Validating Connections between Bars 22
5.6 Connecting USB to the Frame 23
6.0 Dashboard Software Requirements 24
7.0 Mechanical Specifications 25
Appendix A: Troubleshooting Connection Problems 27
Appendix B: Using LEDs to Troubleshoot 30

Table of Figures

Figure 1: Landscape Components 7
Figure 2: Portrait Components 8
Figure 3: Label 10
Figure 4: Hardware Mounting Option - Front View of Bottom Left Corner 15
Figure 5: Hardware Mounting Option - Cross Section Angle View 15
Figure 6: Hardware Mounting Option - Cross Section Top View 16
Figure 7: Mounting Using Existing Screw Holes on Frame 16
Figure 8: Layout of Components in a 3X2 Configuration (Landscape) 17
Figure 9: Layout of Components in a 3X2 Configuration (Portrait) 18
Figure 10: Tieplates (left) and Bridge Connector (right) 19
Figure 11: Connection with Tieplate Attached 19
Figure 12: Bridge Connector Guides 20
Figure 13: Connection with Tieplate (underneath) and Bridge Connector Attached 20
Figure 14: Right Sensor Bar (Master Controller) with Power and USB Connections 21
Figure 15: LEDs Showing a Secured Connection between Bars 22
Figure 16: LED Locations 22
Figure 17: Dimensions of Each Bar in a 55" Landscape Configuration 25
Figure 18: Dimensions of Side Profile and Corners (Identical for All Configurations) 25
Figure 19: Dimensions of Each Bar in a 55" Portrait Configuration 26
Figure 20: Parallel Shift Problem 27
Figure 21: Using a Screwdriver to Nudge Circuit Boards into Alignment 28
Figure 22: Perpendicular Shift Problem 28
Figure 23: Loosening the Set Screw to Re-align Boards 29
Figure 24: Using LEDs to Troubleshoot 30

Table of Tables

Table 1: Contents of Base Kit (Landscape) 12
Table 2: Contents of Base Kit (Portrait) 12
Table 3: Contents of Horizontal Expansion Kit 13
Table 4: Contents of Vertical Expansion Kit (Landscape) 13
Table 5: Ordering Examples 14

Revision History

Revision	Date	Description
1.2	Feb 22, 2017	Updated images and information on example mounting hardware.
1.1	Feb 16, 2017	Added clarifications to LED behavior.
1.0	Jun 15, 2016	Initial release.

Information contained in this manual is believed to be accurate and reliable. However, Baanto assumes no responsibility for the use thereof nor for the rights of third parties, which may be affected in any way by the use thereof. Any representations in this document concerning performance of Baanto products are for informational use only and are not warranties of future performance, either expressed or implied. The only warranty offered by Baanto in relation to this product is the Baanto standard limited warranty, stated in the sales contract or order confirmation form.

Although every attempt has been made to accurately describe the features, installation and operation of this product in this manual, no warranty is granted nor liability assumed in relation to any errors or omissions unless specifically undertaken in the Baanto sales contract or order confirmation. Information contained in this manual is periodically updated and changes will be incorporated into subsequent editions. If you encounter an error, please notify the Baanto Technical Support department. Baanto reserves the right, without notice or liability, to make changes in equipment design or specifications.

Baanto™ and ShadowSense™ are the trademarks of Baanto International Ltd., Canada. All other trademarks as used are the property of the respective owners.

1.0 Introduction

Using patented ShadowSense technology, the Modular Touch System allows frames of any size to be assembled, providing high performance multi-touch capabilities to video walls composed of common thin bezel displays as well as LED panels.

The Modular Touch System is field-installable, requiring minimal tools. The touch frame is separate from the glass so each piece can be removed and replaced without affecting the rest of the system. What's more, with native support for all major operating systems, it really is as simple as plug and play.

Targeted at command and control, broadcast studio, museum, corporate lobby, large retail, stadium and rental applications, the Modular Touch System makes it easy and cost effective to add a whole new dimension to your video wall.

2.0 Parts Overview

The Modular Touch System consists of three core packages:

1. Base Kit
2. Horizontal Expansion Kit
3. Vertical Expansion Kit

Every Modular Touch System requires a Base Kit as a minimum. A Base Kit provides the components to construct a touch frame for a 2 display wide and 1 display high (2X1) video wall. It contains all of the core components of the frame, specifically the master controller that interfaces with external power and a USB connection.

The Horizontal Expansion Kit and Vertical Expansion Kit are added when the overall frame needs to be expanded to accommodate larger video walls.

2.1 Components

Each of the kits will contain a variation of the components shown in Figure 1 and Figure 2 depending on whether it's a landscape configuration or portrait configuration. Each of the bars are identified by a label described in Section 4.1 and the tables in Sections 4.2, 4.3 and 4.4 describe the exact quantities of each component in every kit.

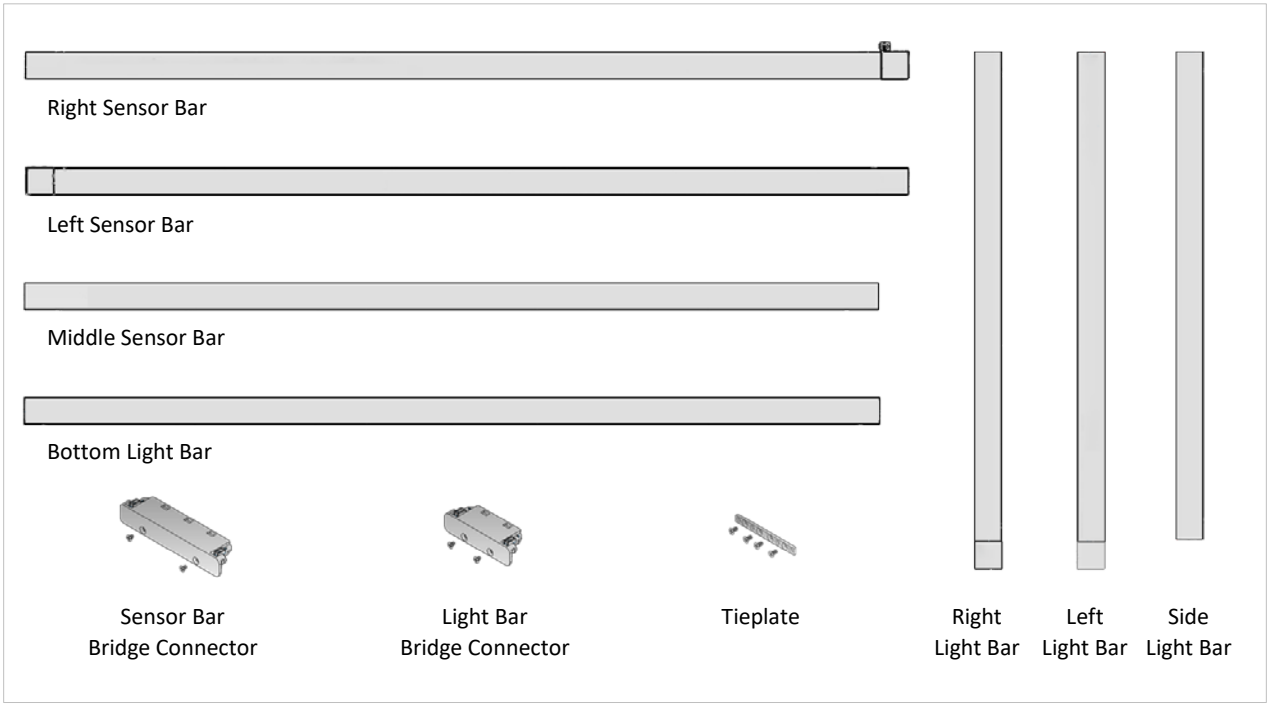

Figure 1: Landscape Components

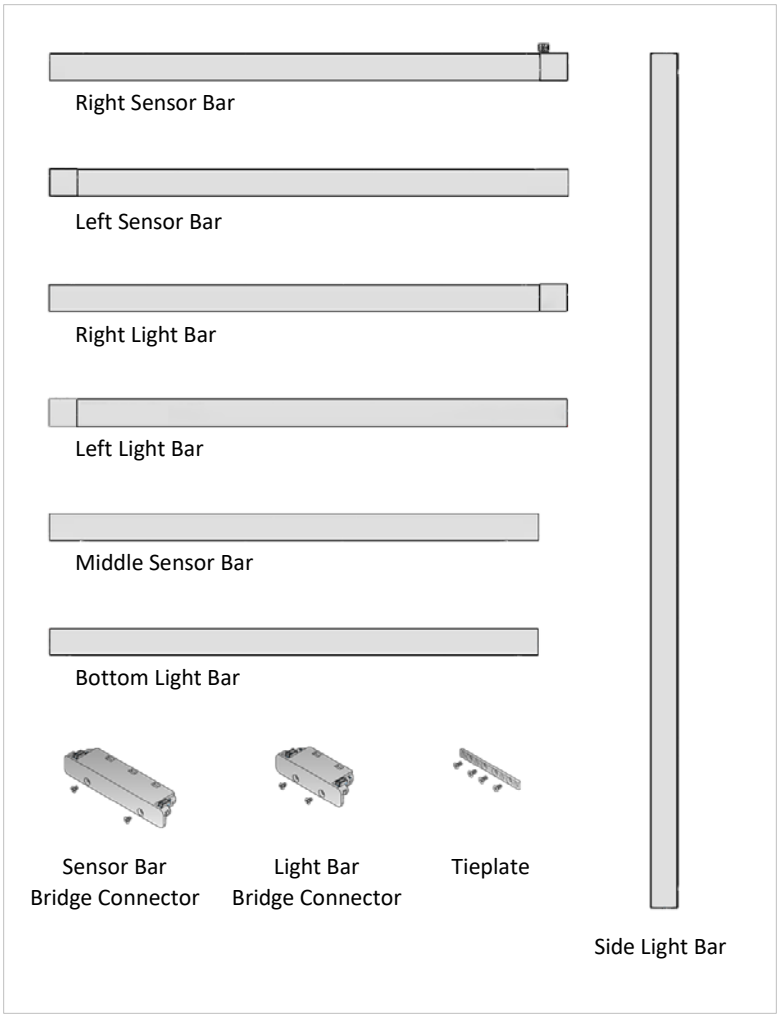

Figure 2: Portrait Components

Landscape components should not be interchanged with portrait components and vice versa.

3.0 Packaging

The Modular Touch System comprises of three unique packages. The number of packages for each system will depend on the overall configuration of the touch frame. At minimum, a system will consist of at least one Base Kit. Information regarding each of the packages are in the following sections.

3.1 Base Kit

Product	Length	Width	Height	Weight
55” Landscape	51 5/8” (1311 mm)	8 1/4” (210 mm)	7” (178 mm)	17.0 lb (7.7 kg)
55” Portrait	51 5/8” (1311 mm)	8 1/4” (210 mm)	7” (178 mm)	13.9 lb (6.3 kg)

3.2 Horizontal Expansion Kit

Product	Length	Width	Height	Weight
55” Landscape	51 5/8” (1311 mm)	8 1/4” (210 mm)	3 1/4” (83 mm)	6.2 lb (2.8 kg)
55” Portrait	30 1/2” (775 mm)	8 1/4” (210 mm)	3 1/4” (83 mm)	4.0 lb (1.8 kg)

3.3 Vertical Expansion Kit

Product	Length	Width	Height	Weight
55” Landscape	30 1/2” (775 mm)	8 1/4” (210 mm)	3 1/4” (83 mm)	4.0 lb (1.8 kg)
55” Portrait	51 5/8” (1311 mm)	8 1/4” (210 mm)	3 1/4” (83 mm)	6.2 lb (2.8 kg)

4.0 Ordering Information

4.1 Identification of Components

Each kit contains several components, each with an independent label to identify its use and position within a frame. Figure 3 shows an example of the label that is found on the back of each bar.

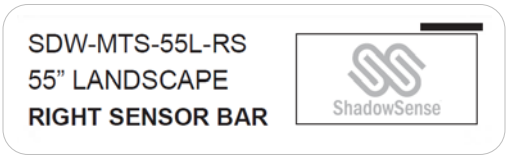

Figure 3: Label

The label contains the following information:

- Text Line 1: Part number of component
- Text Line 2: Diagonal size and orientation of the video wall displays used by the video wall
- Text Line 3: Description of the component
- Picture: Location of the component when viewed from the front (using a 3X2 as an example)

4.2 Contents of Base Kit

The Base Kit (P/N: SDW-MTS-XXX-BASE) contains all of the parts necessary to assemble a 2 display wide by 1 display high touch frame. The size and orientation of the frame depends on the specific model ordered. All connectors and screws to assemble the complete frame are included in the kit, however, the hardware to mount the frame onto a video wall are not included. More information on the mounting options can be found in Section 4.6.

The contents of a Base Kit for landscape mode are shown in

Table 1 while the contents of a Base Kit for portrait mode are shown in Table 2. Part numbers will vary depending on the size of the displays used to construct the video wall. For example, for a video wall composed of 55” displays in landscape mode, the part number for the Base Kit would be SDW-MTS-55L-BASE. For a video wall using 55” displays in portrait mode, the part number for the Base Kit would be SDW-MTS-55P-BASE.

Table 1: Contents of Base Kit (Landscape)

Item	Part Number	Description	Qty.
Right Sensor Bar	SDW-MTS-XXL-RS	Sensor bar that attaches to the top of the display in the top right corner of the video wall. This is also the master controller and contains the power and USB connections for the entire frame.	1
Left Sensor Bar	SDW-MTS-XXL-LS	Sensor bar that attaches to the top of the display in the top left corner of the video wall.	1
Right Light Bar	SDW-MTS-XXL-RL	Light bar that attaches to the right of the display in the bottom right corner of the video wall.	1
Left Light Bar	SDW-MTS-XXL-LL	Light bar that attaches to the left of the display in the bottom left corner of the video wall.	1
Bottom Light Bar	SDW-MTS-XXL-BL	Light bar that attaches to the bottom of each display in the bottom row of the video wall.	2
Sensor Bar Bridge Connector	SDW-MTS-SBC	Bridge connector that provides an electrical connection between two sensor bars.	1
Light Bar Bridge Connector	SDW-MTS-LBC	Bridge connector that provides an electrical connection between two light bars.	5
Fastener Kit		M3 x 5 mm Screws (qty. 36) Tieplates (qty. 6)	

Table 2: Contents of Base Kit (Portrait)

Item	Part Number	Description	Qty.
Right Sensor Bar	SDW-MTS-XXP-RS	Sensor bar that attaches to the top of the display in the top right corner of the video wall. This is also the master controller and contains the power and USB connections for the entire frame.	1
Left Sensor Bar	SDW-MTS-XXP-LS	Sensor bar that attaches to the top of the display in the top left corner of the video wall.	1
Right Light Bar	SDW-MTS-XXP-RL	Light bar that attaches to the bottom of the display in the bottom right corner of the video wall.	1
Left Light Bar	SDW-MTS-XXP-LL	Light bar that attaches to the bottom of the display in the bottom left corner of the video wall.	1
Side Light Bar	SDW-MTS-XXP-SL	Light bar that attaches to the left or right of each display on either side of the video wall.	2
Sensor Bar Bridge Connector	SDW-MTS-SBC	Bridge connector that provides an electrical connection between two sensor bars.	1
Light Bar Bridge Connector	SDW-MTS-LBC	Bridge connector that provides an electrical connection between two light bars.	5
Fastener Kit		M3 x 5 mm Screws (qty. 36) Tieplates (qty. 6)	

4.3 Contents of Horizontal Expansion Kit

A Horizontal Expansion Kit (P/N: SDW-MTS-XXX-HORZ) is used to expand the touch frame as more displays are added to make a video wall wider. To determine the number of Horizontal Expansion Kits that are required, subtract 2 from the total number of displays forming the width of the video wall. The contents of the Horizontal Expansion Kit are shown in Table 3.

Table 3: Contents of Horizontal Expansion Kit

Item	Part Number	Description	Qty.
Middle Sensor Bar	SDW-MTS-XXX-MS	Sensor bar that attaches to the top of each display in the top row of the video wall.	1
Bottom Light Bar	SDW-MTS-XXX-BL	Light bar that attaches to the bottom of each display in the bottom row of the video wall.	1
Sensor Bar Bridge Connector	SDW-MTS-SBC	Bridge connector that provides an electrical connection between two sensor bars.	1
Light Bar Bridge Connector	SDW-MTS-LBC	Bridge connector that provides an electrical connection between two light bars.	1
Fastener Kit		M3 x 5 mm Screws (qty. 12) Tieplates (qty. 2)	

4.4 Contents of Vertical Expansion Kit

A Vertical Expansion Kit (P/N: SDW-MTS-XXX-VERT) is used to expand the touch frame as more displays are added to make a video wall taller. To determine the number of Vertical Expansion Kits that are required, subtract 1 from the total number of displays forming the height of the video wall. The contents of the Vertical Expansion Kit are shown in Table 4.

Table 4: Contents of Vertical Expansion Kit (Landscape)

Item	Part Number	Description	Qty.
Side Light Bar	SDW-MTS-XXL-SL	Light bar that attaches to the side of each display in the left and right columns of the video wall.	2
Light Bar Bridge Connector	SDW-MTS-LBC	Bridge connector that provides an electrical connection between two light bars.	2
Fastener Kit		M3 x 5 mm Screws (qty. 12) Tieplates (qty. 2)	

4.5 Order Quantities Example

For common video wall layouts, refer to Table 5 for the quantity of each kit that is required.

Table 5: Ordering Examples

Layout	Part	Qty.
2X2 Landscape	SDW-MTS-XXL-BASE SDW-MTS-XXL-VERT	1 1
3X2 Landscape	SDW-MTS-XXL-BASE SDW-MTS-XXL-VERT SDW-MTS-XXL-HORZ	1 1 1
3X3 Landscape	SDW-MTS-XXL-BASE SDW-MTS-XXL-VERT SDW-MTS-XXL-HORZ	1 2 1
3X1 Portrait	SDW-MTS-XXP-BASE SDW-MTS-XXP-HORZ	1 1
4X1 Portrait	SDW-MTS-XXP-BASE SDW-MTS-XXP-HORZ	1 2

4.6 Mounting Hardware

To facilitate the installation of the Modular Touch System, special hardware can be ordered to attach each component to the edge of the outer displays in the video wall. These mounting systems are specific to the type and manufacturer of displays being used and will vary according to the integrator providing the hardware as well.

For a list of preferred integration partners or for advice on designing your own mounting hardware, contact your regional Baanto sales representative.

For an example of one mounting option, refer to Figure 4, Figure 5 and Figure 6. These drawings show one method for mounting the Modular Touch System to an array of displays. The bracket, which is shown in dark grey, attaches to the side of the displays along the outside edges of the video wall. This attachment uses existing mounting holes in the display and is specific to the manufacturer and model of the display.

The other end of the bracket attaches to the Modular Touch System, which is shown in black. Each bar in the system provides a convenient channel with pre-drilled screw holes that can be used to attach to the mounting bracket. Figure 7 shows how to attach the bar to the bracket using a M3 X 8 mm pan head screw. The screw is inserted into the pre-drilled holes in the bar, and the flat end of the screw then uses pressure to secure it to the channel of the bracket. Also notice in Figure 7 the two thumb screws in the mounting bracket that allow the user to adjust the location of the overall frame, sliding it inward and outward, as well as forward and backward to achieve the ideal placement.

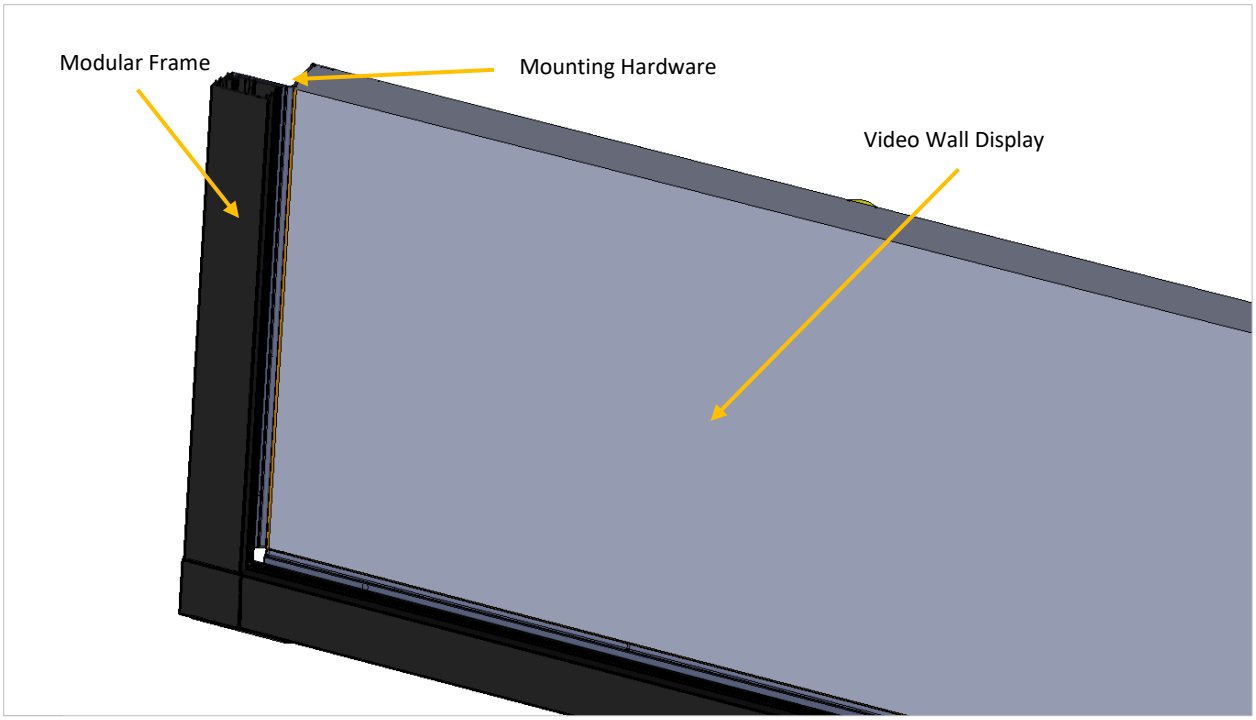

Figure 4: Hardware Mounting Option - Front View of Bottom Left Corner

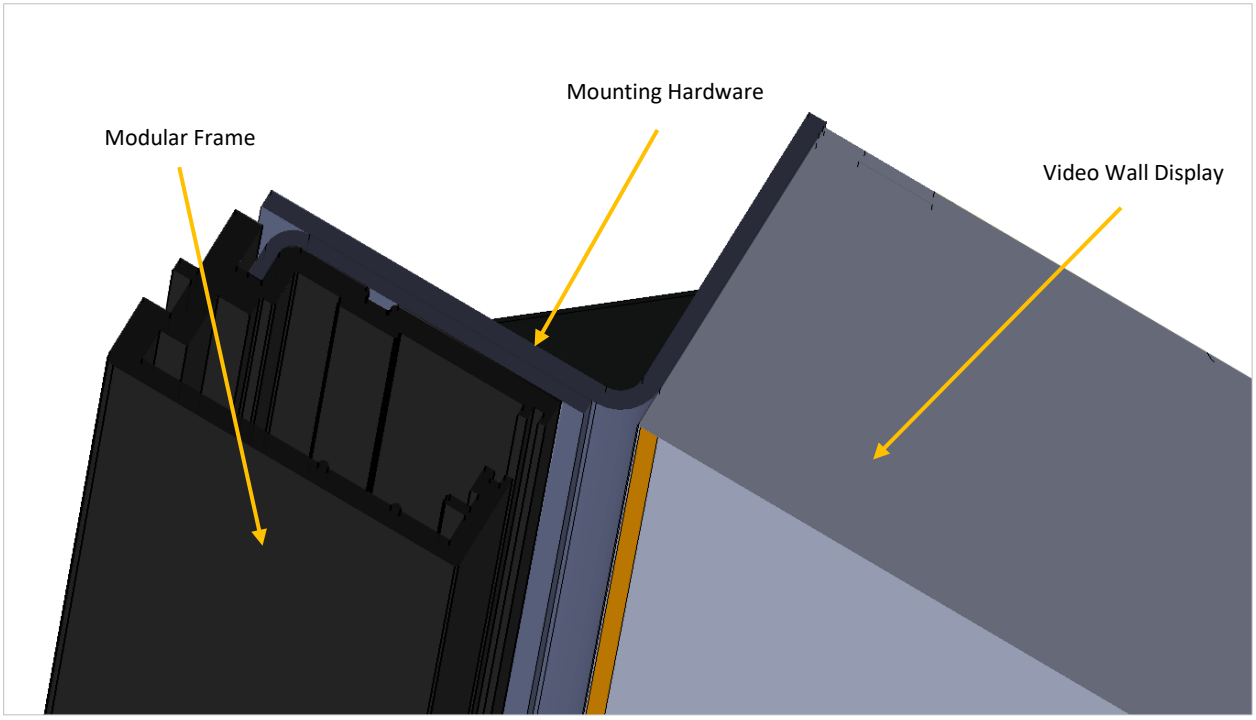

Figure 5: Hardware Mounting Option - Cross Section Angle View

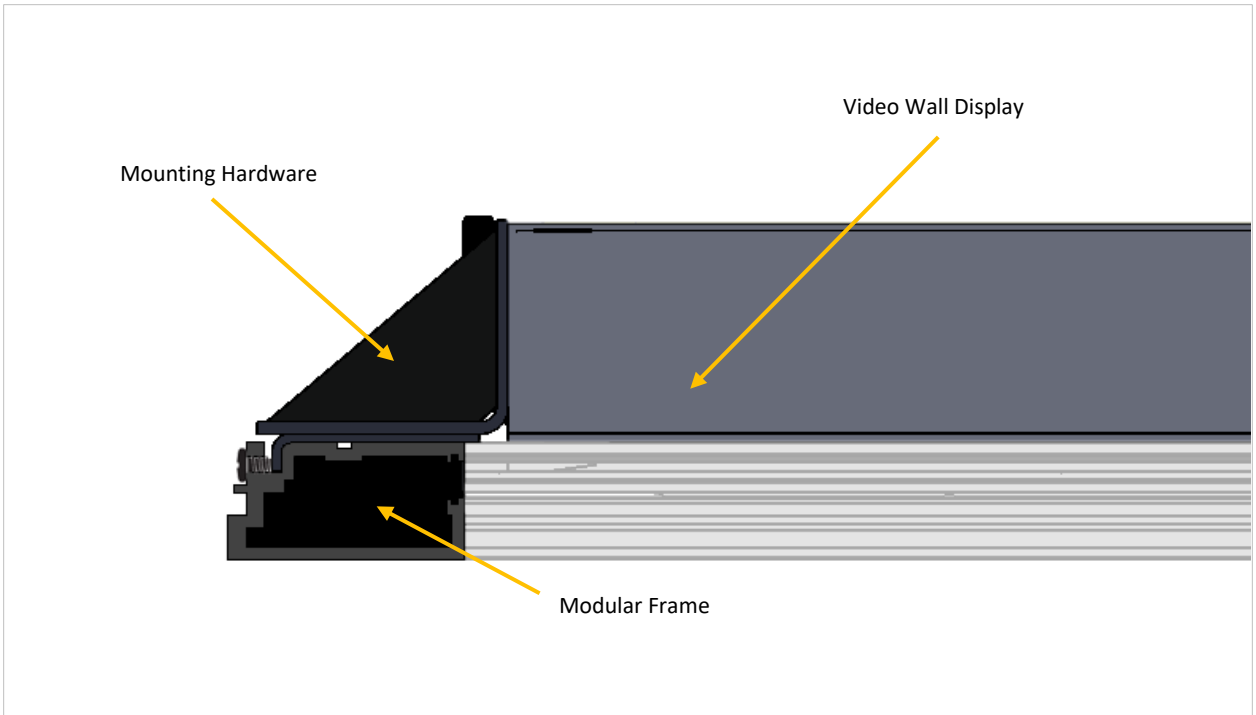

Figure 6: Hardware Mounting Option - Cross Section Top View

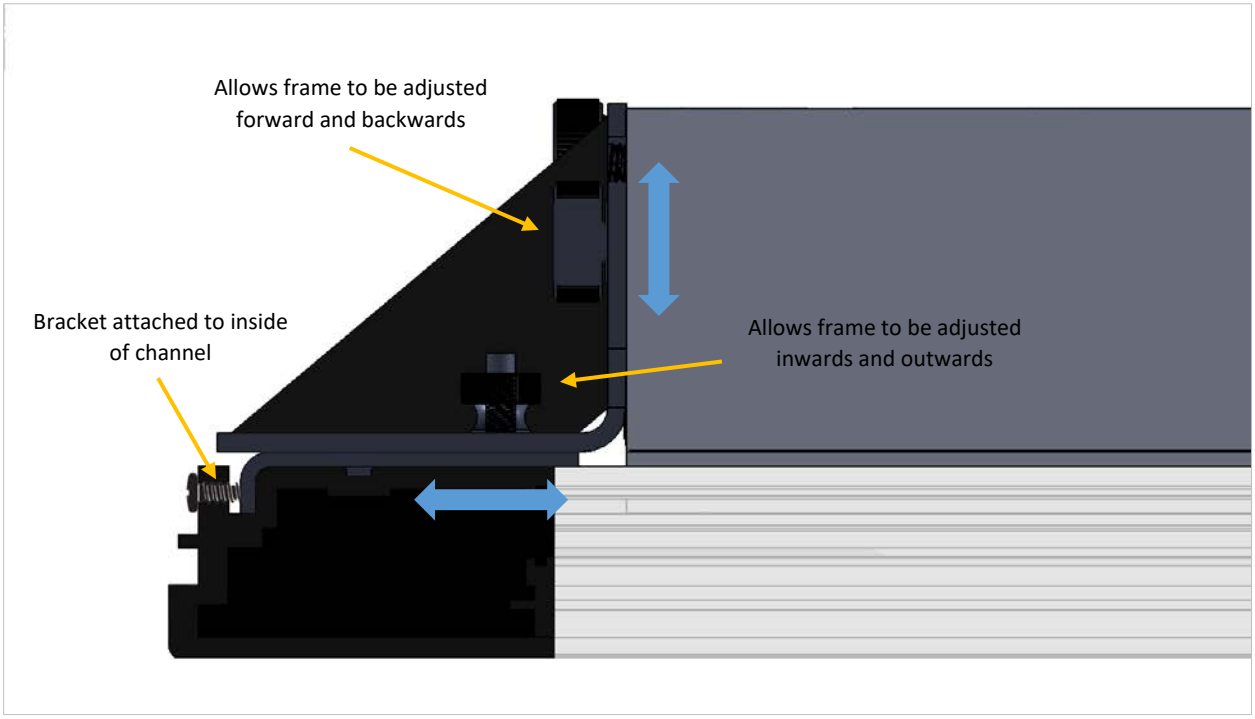

Figure 7: Detailed View of Mounting Point and Adjustments

5.0 Installation

The Modular Touch System is assembled using the following sequence of steps:

1. Install the Sensor Bars along the top of the video wall starting from right to left (Section 5.3)
2. Install the Light Bars along the remaining edges of the video wall starting from the right side, then the bottom side, and finally the left side (Section 5.3)
3. Connect power to the frame (Section 5.4)
4. Validate the connection between bars using the troubleshooting LEDs (Section 0)
5. Connect USB to the frame (Section 5.6)

5.1 Required Tools

Each of the kits for the Modular Touch System include all of the necessary fasteners to connect the frame together. The only tool required for the assembly of the frame is a 2.5 mm sized Phillips screwdriver.

5.2 Layout of Bars

Before beginning the installation of the Modular Touch System ensure that all of the components are accounted for. Arrange the various bars so that their locations on the video wall are correct. Figure 8 shows the layout of a 3X2 landscape configuration, which uses one of every kit. This example can be used as a reference point when adding more horizontal or vertical expansion kits.

The overall touch surface of the assembled frame may be larger than the display surface so to ensure that the frame is centered horizontally and vertically with respect to the display surface, mount the bars from the center out. For example, in the 3X2 configuration below, mount the Middle Sensor Bar first so that it is centered horizontally to the center display, then mount the Side Light Bar so that the bottom end meets the boundary between the top and bottom row of displays.

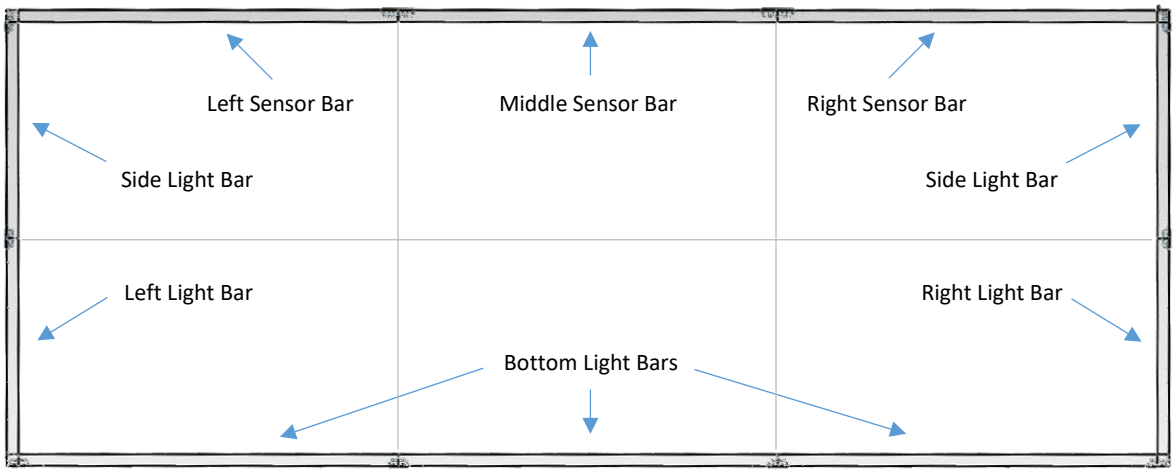

Figure 8: Layout of Components in a 3X2 Configuration (Landscape)

The same layout using a portrait configuration is shown in Figure 9. Notice that the location of the right and left light bars differ for the two configurations.

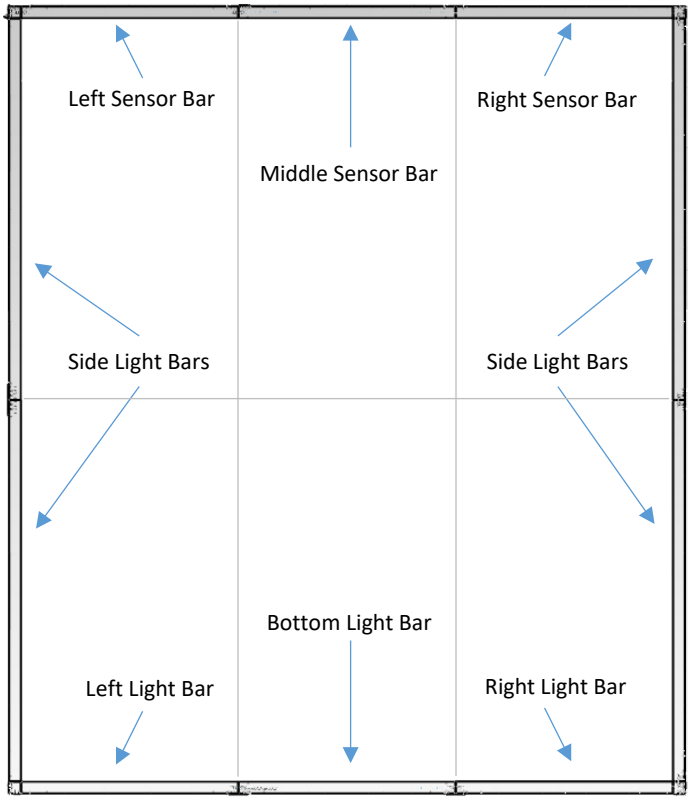

Figure 9: Layout of Components in a 3X2 Configuration (Portrait)

5.3 Connecting Bars Together

Each component in the Modular Touch System is designed to connect with adjoining pieces at each end. This connection is provided by two components: a Tieplate, and a Bridge Connector. The components are shown in Figure 10.

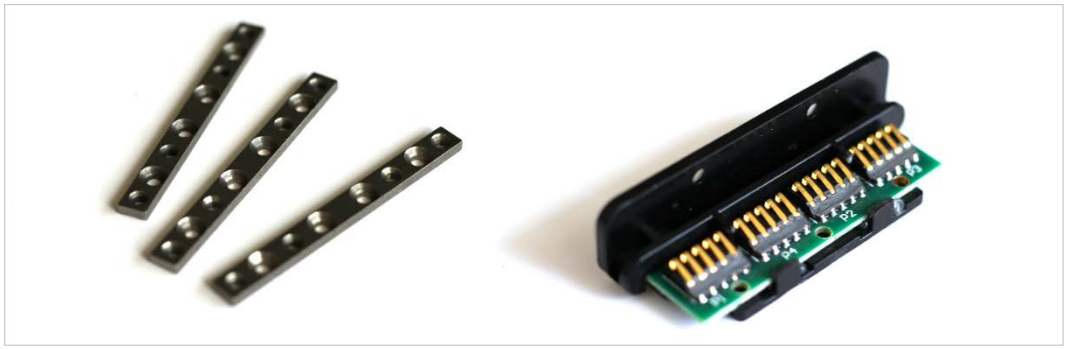

Figure 10: Tieplates (left) and Bridge Connector (right)

The Tieplate provides the necessary support to hold two bars together. The Tieplate is fastened using four of the provided M3 x 5 mm screws, with two screws inserted into each adjoining bar. All four screws should be tighten gradually and evenly to ensure that the Tieplate is centered between the two bars. The completed connection is shown in Figure 11.

Figure 11: Connection with Tieplate Attached

Once the two bars are secured using the Tieplate, the Bridge Connector is inserted to provide an electrical connection between the two bars. The Bridge Connector is a passive device that does not contain any electronic components. The Bridge Connector used by the Sensor Bars and the Light Bars are different sizes so ensure that the correct part is being used. The longer Bridge Connector is used for the Sensor Bars along the top, while the shorter Bridge Connector is used for the Light Bars.

Make sure that the power is disconnected when attempting to insert or remove any of the Bridge Connectors.

When inserting the Bridge Connector, it is important to be mindful of the insertion guides on the Bridge Connector. These are used to guide the connector into place by lining them up with the guides on the printed circuit boards (PCBs) on the end of each bar. The guides on the Bridge Connector are shown in Figure 12.

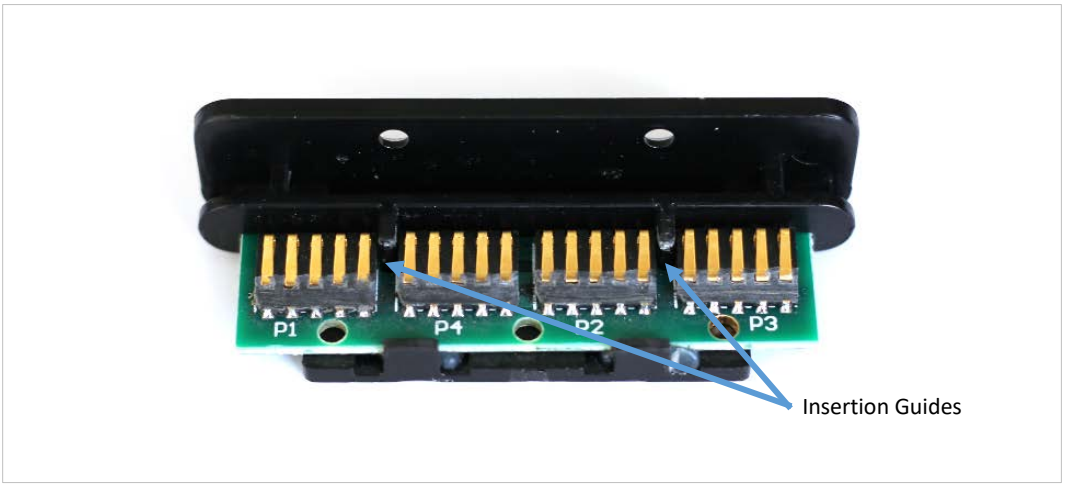

Figure 12: Bridge Connector Guides

If the Bridge Connector is difficult to insert then take a closer look at the PCBs on each bar to make sure that they are aligned correctly. The PCB on each bar should be flush with the end of the metal extrusion and they should also lie flat next to each other. If the PCB is protruding or recessed on either side, it must be adjusted before inserting the Bridge Connector. See Appendix A: Troubleshooting for examples of poor connections and how to correct them.

Once installed correctly, secure the Bridge Connector using two of the provided M3 x 5 mm screws. A completely installed Bridge Connector is show in Figure 13.

Figure 13: Connection with Tieplate (underneath) and Bridge Connector Attached

Take note that the very last connector in the top left corner does not have a connection to the top left sensor bar. The Light Bar Bridge Connector used in this position can be used as a spare in case another connector is damaged.

5.4 Connecting Power to the Frame

Power is supplied to the entire frame through the right sensor bar, also referred to as the master controller, using a 12V, 2.5 A DC power supply with a barrel plug connector. The barrel plug has dimensions of 2.1 mm (inner diameter) x 5.5 mm (outer diameter) x 9.5 mm (length). The master controller with the cable assembly is show in Figure 14.

Figure 14: Right Sensor Bar (Master Controller) with Power and USB Connections

When power is supplied to the frame, the LEDs for each section will light up to indicate the status of each section as described in Section 0. A tip for assembling the frame is to cycle power to the frame after each component is installed following the sequence from the same section. This ensures that if there is a problem with a connection then it is identified before subsequent bars are installed. If all of the connections on the frame are good then the LEDs will turn off shortly afterwards.

5.5 Validating Connections between Bars

The Modular Touch System has been designed to make the setup of a touch frame as easy as possible. To facilitate the process and to ensure that assembly is done correctly, LEDs have been placed at strategic locations to provide feedback for when a connection is made. These LEDs are a quick way to determine if the connection between two bars have been made correctly. Figure 15 shows an example of a connection that is secured.

Figure 15: LEDs Showing a Secured Connection between Bars

Figure 16 shows the approximate location of all the LEDs in a 3X2 configuration. It is important to note that to use the LEDs to help verify the connections of the various bars, a sequence must be followed in assembling the frame. This is because the LEDs are connected in series and each one relies on the power connection from the previous bar to activate. This sequence is also shown in Figure 16 as a set of numbers and letters. Sensor Bars are installed from right to left and Light Bars are installed in a clockwise direction starting with the right side.

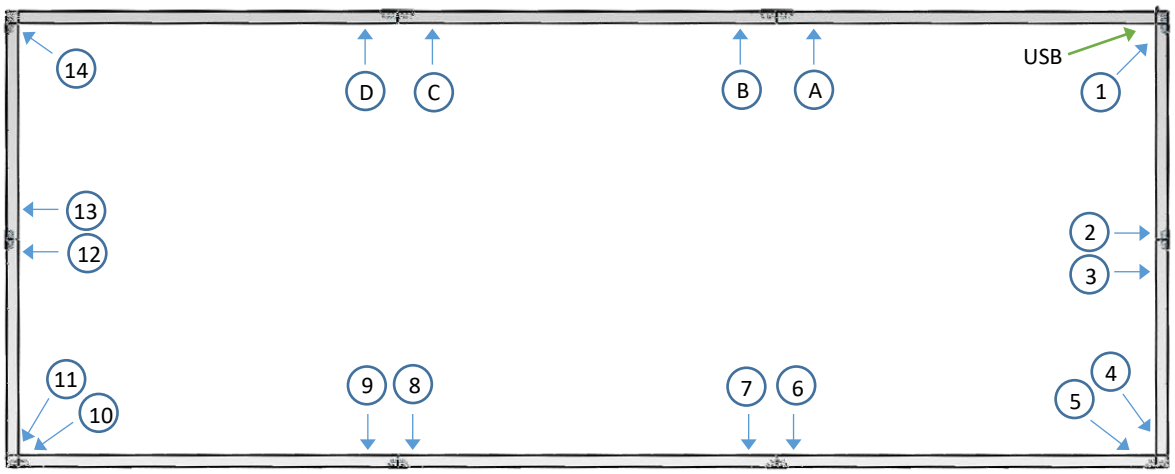

Figure 16: LED Locations

The numbers are used to identify the sequence of LEDs for the Light Bars and the letters are used to identify the sequence of LEDs for the Sensor Bars. The assembly of the Sensor Bars and the Light Bars can be done independently of each other. The LEDs will remain on as long as the connection is incomplete.

Once the entire frame is assembled, all connections are secured, and power is applied to the frame, the LEDs will flash brightly once and then dim after two seconds if everything is assembled correctly. If any of the expected LEDs do not turn on or they remain on for longer than a couple of seconds, refer to Appendix B: Using LEDs for troubleshooting tips.

When all connections are secured and power is applied to the frame, the LEDs will flash brightly for two seconds before dimming.

5.6 Connecting USB to the Frame

Once power has been supplied to the frame and all connections have been validated, an LED on the master controller bar will continue to flash at a rate of once per second until a USB connection has been made to a computer. If it flashes at a faster rate, refer to Appendix B: Using LEDs for troubleshooting tips.

The USB connection on the master controller can be connected to a computer using a USB 2.0 A to A Male to Female extension cable. To ensure optimal performance, keep the length of the USB extension cable as short as practical.

6.0 Dashboard Software Requirements

The Modular Touch System utilizes Dashboard, a Windows based application, for configuration and diagnostic purposes. The application is used to provide the initial calibration of the completed touch frame as well as any initial configuration and diagnostics that may be necessary. Once the initial setup is complete, it is not required for operation so a non-Windows based computer can be used to drive the touchscreen.

For the most current information on Dashboard refer to the document titled, *AN-SW-001 Baanto Dashboard Software*. Access to this document can be found on the Baanto website (http://baanto.com/knowledge-base/) or through your regional Baanto technical representative.

7.0 Mechanical Specifications

The dimensions of each bar are shown in Figures Figure 17, Figure 18 and Figure 19. For configurations other than 3X2, the inner and outer dimensions can be determined by using the width of the Middle Sensor Bar and height of the Side Light Bar to expand the frame.

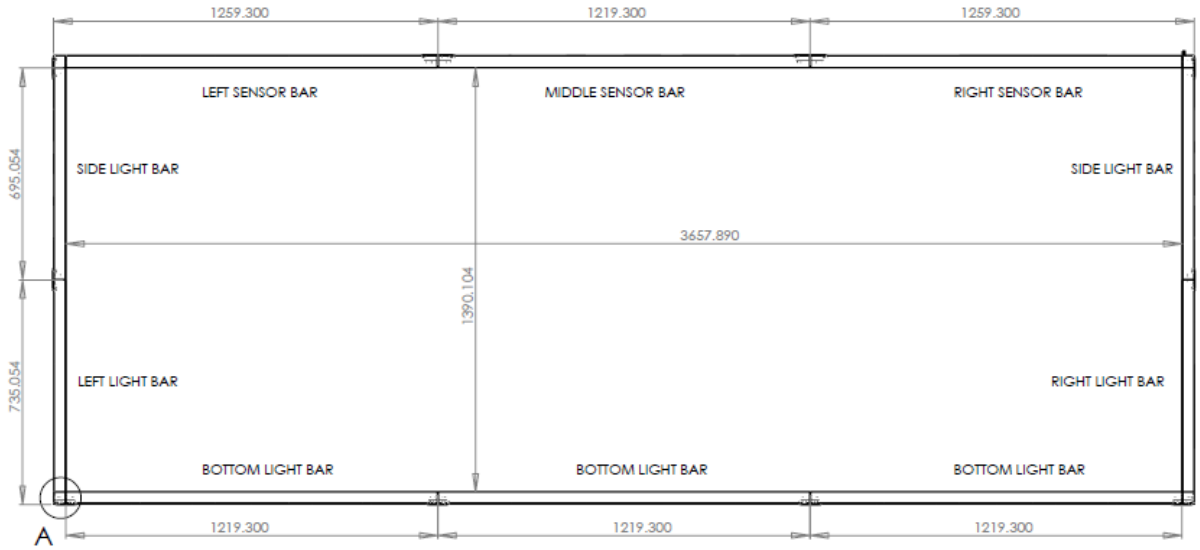

Figure 17: Dimensions of Each Bar in a 55" Landscape Configuration

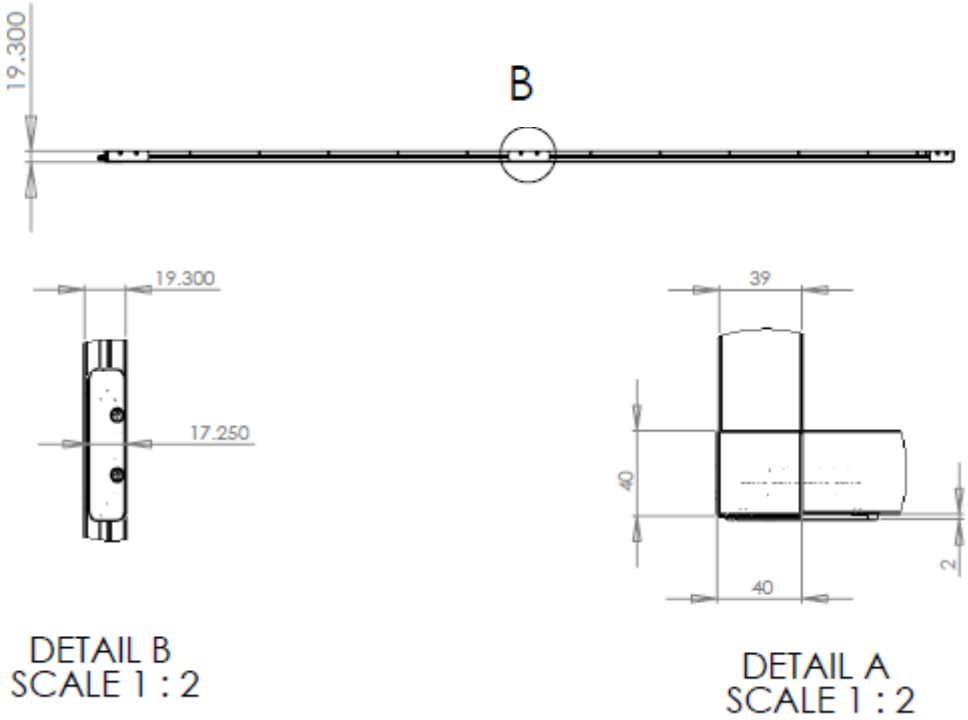

Figure 18: Dimensions of Side Profile and Corners (Identical for All Configurations)

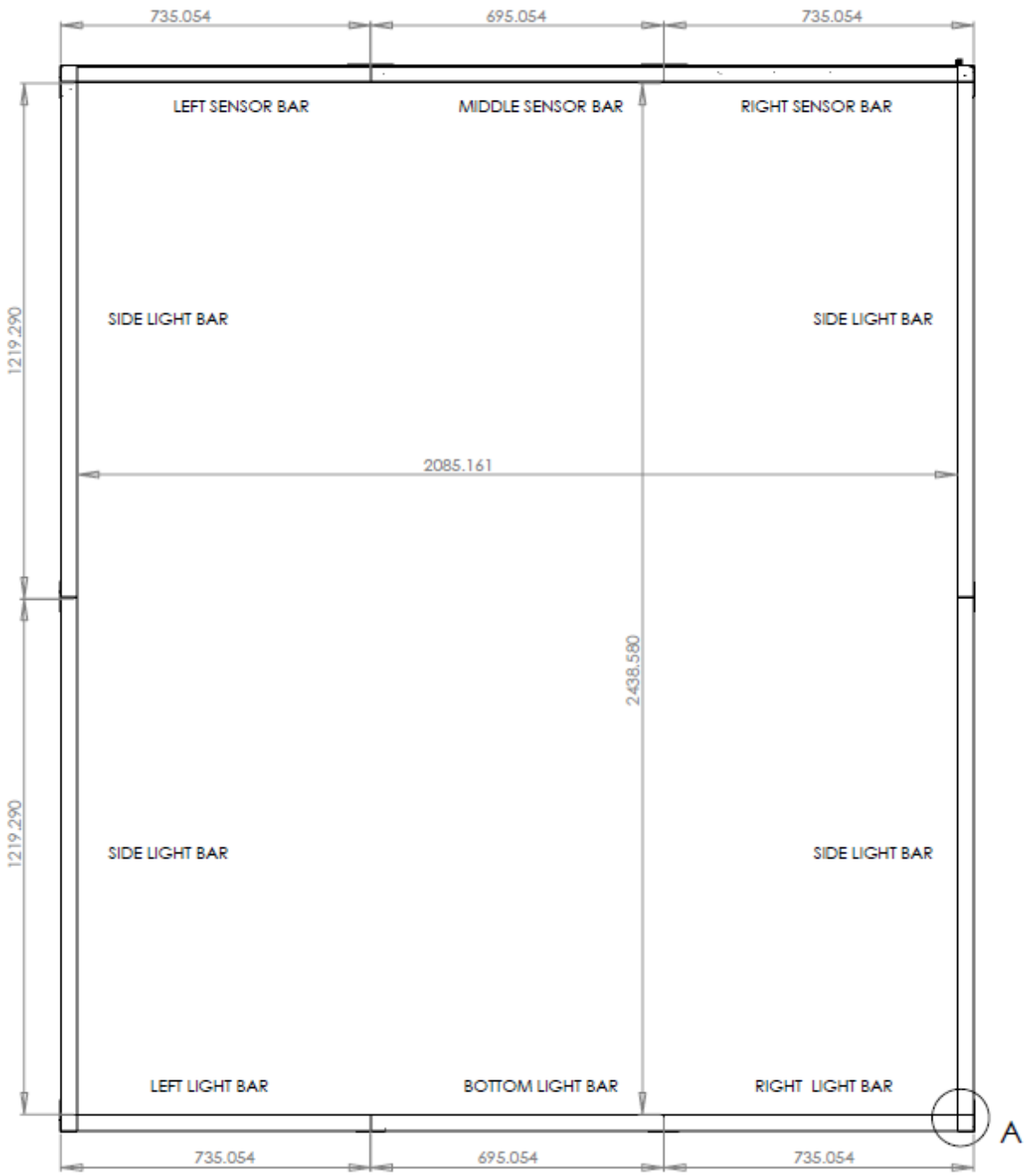

Figure 19: Dimensions of Each Bar in a 55" Portrait Configuration

Appendix A: Troubleshooting Connection Problems

When connecting two bars together, it is important that the bars are aligned before inserting the Bridge Connector. This applies to both the Light Bars and Sensor Bars. Figure 20 shows an example where the printed circuit boards (PCBs) have been shifted parallel along the extrusion, causing a parallel alignment issue. The blue arrow points to the seam between the two extrusions, while the red arrow points to the seam between the two PCBs. These two points should be aligned before inserting a Bridge Connector.

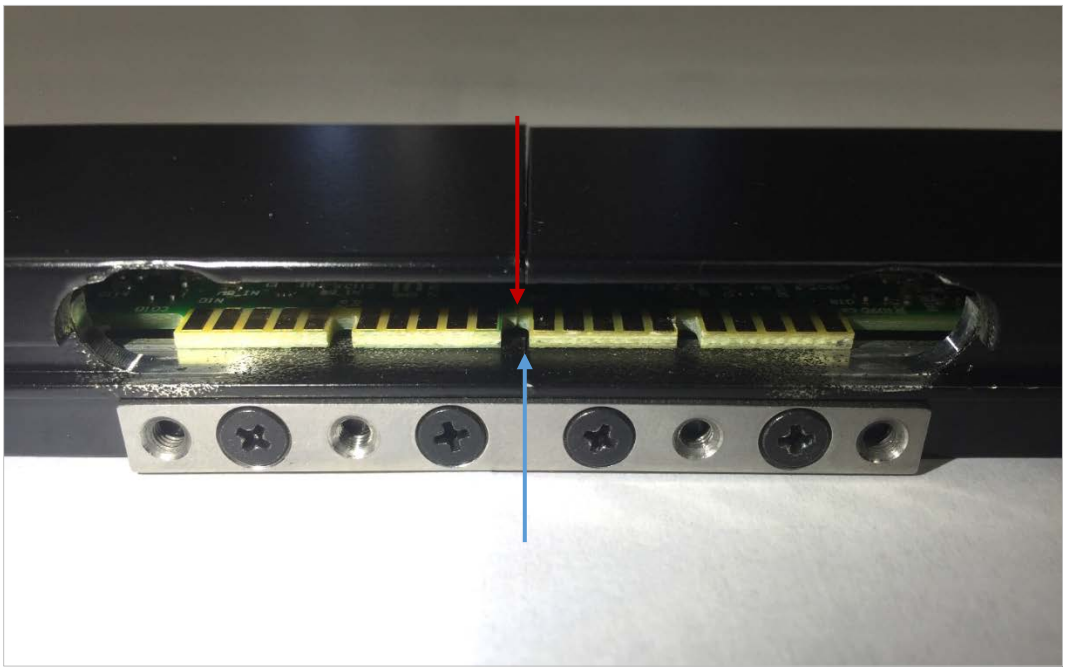

Figure 20: Parallel Shift Problem

The PCBs can be aligned by taking a small pointed object such as a screwdriver and gently nudging the boards into place using the notches in the circuit board. This is shown in Figure 21.

Figure 21: Using a Screwdriver to Nudge Circuit Boards into Alignment

Another problem that may occur is that the PCBs can be shifted in a perpendicular direction to the length of the extrusion. This issue is shown in Figure 22. The blue arrow and the red arrow should be aligned.

Figure 22: Perpendicular Shift Problem

When this problem occurs, it's usually because the set screw used to hold the PCB in place has been overtightened and the PCB has been push back too far. In order to resolve this problem, the set screw needs to be loosened until the boards are aligned. The location of the set screw is shown Figure 23.

Figure 23: Loosening the Set Screw to Re-align Boards

Appendix B: Using LEDs to Troubleshoot

If the LEDs described in Section 5.5 do not behave as indicated then there are a few things that can be done to troubleshoot. Figure 24 is used as a reference when pointing out the location of various LEDs and connection points.

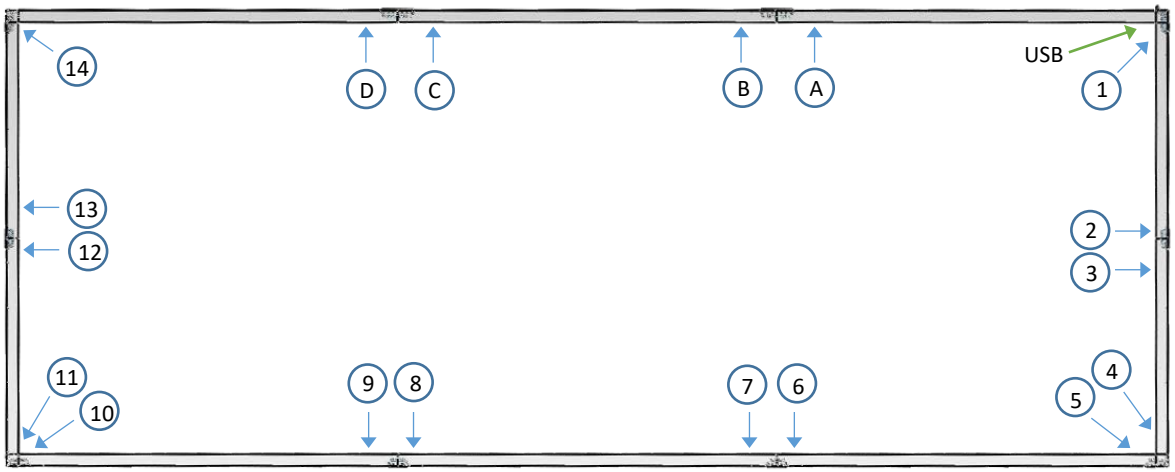

Figure 24: Using LEDs to Troubleshoot

LED at Beginning of Bar Does Not Turn On

Using the bottom middle Light Bar as an example, if LED 7 does not light up then there is an issue with the connection between points 6 and 7. Try the following to remedy the problem:

1. Inspect the alignment of the boards between points 6 and 7. (See Appendix A: Troubleshooting Connection Problems)
2. If the connection appears to be good then replace the Bridge Connector with the spare that is included in the Base Kit.
3. If the LED does not turn on then swap the bar with another one if available. If LED 7 then turns on then the bar that was swapped out needs to be replaced.
4. If LED 7 of the swapped bar does not turn on then swap the bar that comes before this one. *(Recall that Sensor Bars should be installed from right to left and Light Bars should be installed in clockwise direction starting with the right side.)*

LED at the End of Bar Does Not Turn On

Using the bottom middle Light Bar as an example, if LED 7 does light up but LED 8 does not light up then there is an issue within the bar itself. Try the following to remedy the problem:

1. Ensure that the Bridge Connector at the end of the bar, points 8 and 9 is not installed.
2. Swap the bar with another one if available. The bar that was swapped out will need to be replaced.

All LEDs Light Up but Do Not Turn Off

The LEDs are used to validate the connections within the frame. If all of the LEDs (1 to 14 and A to D) light up but do not turn off after a couple of seconds then there could still be a problem with the master controller detecting the geometry or configuration of the frame. Typically when this happens then there may be a problem with the very last Sensor Bar in the top left corner. Since this bar does not have an LED at the end, there may be a problem internal to that bar. Try the following to remedy the problem:

5. Inspect the alignment of the boards between points C and D. (See Appendix A: Troubleshooting Connection Problems)
6. If the connection appears to be good then replace the Sensor Bar Bridge Connector with the spare that is included in the Base Kit.
7. If neither of the above resolve the problem then the entire Sensor Bar needs to be replaced.

USB LED Flashes Rapidly

The USB LED will flash rapidly, approximately every half second, until the entire frame is completely constructed. If all connections have been made and the USB LED still flashes rapidly then it will likely be an issue with the last Sensor Bar in the top left corner. Refer to the topic *All LEDs Light Up but Do Not Turn Off* for debugging tips.